skkmigas PERTAMINA EP	**PERTAMINA EP REGIONAL 1 ZONA 4**	POG

DATASHEET FOR BULK MATERIAL	No. Dok. : TMBP-SP001-EL-DST-D108 Rev. : A Halaman : 1 dari 89

NAMA PEMILIK PROYEK : **PT PERTAMINA EP**

NAMA PROYEK : **JASA PEMBANGUNAN FASILITAS PRODUKSI STASIUN PENGUMPUL (SP) TANJUNG MIRING BARAT & KARANGAN TIMUR**

LOKASI : **SP TANJUNG MIRING BARAT & KARANGAN TIMUR - FIELD LIMAU**

NO. KONTRAK : **SA02035383B**

REV.	TGL.	DESKRIPSI	DISIAPKAN	DIPERIKSA	DISETUJUI	DIPERIKSA	DISETUJUI
A	30/12/2025	Issued For Review	FN	AS	RTN		
			PT. PROSYMPAC OIL & GAS			PT. PERTAMINA EP	

TABEL REVISI

Rev.	Tanggal	Deskripsi

COMMENT RESPONSE SHEET

No.	Page	Company's Comment	Contractor's Response	Remarks

DAFTAR ISI

NO.	ID. NO.	JUDUL	SHEET
1	-	COVER	1 dari 89
2	-	REVISION TABLE	2 dari 89
3	-	COMMENT RESPONSE SHEET	3 dari 89
4	-	DAFTAR ISI	4 dari 89
5	RS - 01	GALVANIZED (RSG) CONDUIT	7 dari 89
6	RS - 02	COUPLING CONDUIT	8 dari 89
7	RS - 03	90° BENDS CONDUIT	9 dari 89
8	RS - 04	INSULATED BUSHING	10 dari 89
9	EF - 01	ELECTRICAL METALIC TUBING (EMT)	11 dari 89
10	EF - 02	EMT SET SCREW (THREAD LESS) COUPLING	12 dari 89
11	EF - 03	CONDUIT FITTING SET SCREW (THREAD LESS) EMT. CONNEC	13 dari 89
12	EF - 04	COMBINATION CONDUIT COUPLING	14 dari 89
13	EF - 05	LIQUIDTIGHT CONNECTOR	15 dari 89
14	EF - 06	FLEXIBLE CONDUIT	16 dari 89
15	EF - 07	ONE HOLE CLAMP	17 dari 89
16	EF - 08	CONDUIT CLAMP 2 HOLES	18 dari 89
17	PC - 01	PVC CONDUIT	19 dari 89
18	PC - 02	PVC ELBOW	20 dari 89
19	PC - 03	PVC CONDUIT ADAPTOR	21 dari 89
20	JB - 01	WEATHER PROOF JUNCTION BOX (ROUND TYPE) / X-TYPE	22 dari 89
21	JB - 02	EXPLOSION PROOF JUNCTION BOX (ROUND TYPE) / X-TYPE	23 dari 89
22	JB - 03	WEATHER PROOF JUNCTION BOX (SQUARE TYPE)	24 dari 89
23	JB - 04	EXPLOSION PROOF JUNCTION BOX (SQUARE TYPE)	25 dari 89
24	JB - 05	JUNCTION BOX (SQUARE TYPE)	26 dari 89
25	JB - 06	JUNCTION BOX (SQUARE TYPE)	27 dari 89
26	CG - 01	CABLE GLAND (EXPLOSION PROOF)	28 dari 89
27	CG - 02	CABLE GLAND (NON EXPLOSION PROOF)	29 dari 89
28	CG - 03	CABLE GLAND (EXPLOSION PROOF)	30 dari 89
29	CG - 04	CABLE GLAND (NON EXPLOSION PROOF)	31 dari 89
30	CG - 05	EARTH TAGS	32 dari 89
31	CG - 06	LOCKNUT	33 dari 89
32	CG - 07	PVC SHROUDS	34 dari 89
33	CG - 08	CABLE GLAND SERRATED WASHER	35 dari 89
34	CG - 09	HEAT SHRINKABLE SLEEVE	36 dari 89
35	CA - 01	PRE - INSULATED TERMINAL LUG	37 dari 89
36	CA - 02	TERMINAL LUG (COMPRESSION TYPE)	38 dari 89
37	CA - 03	SCREW WIRE CONNECTOR	39 dari 89
38	CA - 05	BEAM CLAMP	40 dari 89

NO.	ID. NO.	JUDUL	SHEET
39	CA - 06	CABLE SADDLE	41 dari 89
40	CA - 07	CABLE TIE	42 dari 89
41	CA - 08	WIRE MARKER (Z-TYPE MARKER, STRAIGHT)	43 dari 89
42	CA - 09	CARRIER STRIP FOR (K-TYPE MARKER)	44 dari 89
43	CA - 10	K-TYPE MARKERS, (ELLIPTICAL PROFILE)	45 dari 89
44	CA - 11	CABLE TIE	46 dari 89
45	CA - 12	CABLE MARKER / METAL STAMP TYPE	47 dari 89
46	CA - 13	CABLE ROUTE MARKER POST	48 dari 89
47	CA - 14	CABLE ROUTE MARKER SYMBOL	49 dari 89
48	CA - 15	RED CONCRETE TILE	50 dari 89
49	CA - 16	YELLOW WARNING TAPE	51 dari 89
50	CA - 17	PVC INSULATION TAPES, FOR FINAL WRAPPING OF CABLE TERMINATION	52 dari 89
51	CA - 18	RUBBER INSULATION TAPE (RUBBER BASE)	53 dari 89
52	CA - 19	SEALING COMPOUND (NON HARDENING TYPE)	54 dari 89
53	BN - 01	U - TYPE BOLT	55 dari 89
54	BN - 02	BOLT & NUT (HEXAGONAL) FULL THREAD	56 dari 89
55	BN - 03	DYNA BOLT	57 dari 89
56	BN - 04	HOLE-IN ANCHOR BOLT (TYPE - AY)	58 dari 89
57	RW - 01	RACEWAY CHANNEL	59 dari 89
58	RW - 02	COVER RACEWAY CHANNEL	60 dari 89
59	RW - 03	90° HORIZONTAL RACEWAY ELBOW COVER	61 dari 89
60	RW - 04	90° HORIZONTAL RACEWAY ELBOW	62 dari 89
61	RW - 05	HORIZONTAL RACEWAY TEE COVER	63 dari 89
62	RW - 06	HORIZONTAL RACEWAY TEE	64 dari 89
63	RW - 07	HORIZONTAL RACEWAY CROSS COVER	65 dari 89
64	RW - 08	HORIZONTAL RACEWAY CROSS	66 dari 89
65	RW - 09	RACEWAY END CONNECTOR	67 dari 89
66	RW - 10	RACEWAY HANGER	68 dari 89
67	RW - 11	RACEWAY BOX CONNECTOR	69 dari 89
68	RW - 12	RACEWAY COVER CLAMP	70 dari 89
69	RW - 13	RACEWAY JOINTER	71 dari 89
70	SM - 01	COUPLING NUT	72 dari 89
71	SM - 02	HANGER ROD	73 dari 89
72	SM - 03	STEEL ANGLE	74 dari 89
73	SM - 04	STEEL CHANNEL	75 dari 89
74	SM - 05	STEEL PLATE	76 dari 89
75	SM - 06	STEEL WIRE ROPE	77 dari 89
76	SM - 07	UNISTRUT CHANNEL	78 dari 89
77	SM - 08	UNISTRUT CLAMP	79 dari 89
78	MCT - 01	MULTI CABLE TRANSIT	80 dari 89

NO.	ID. NO.	JUDUL	SHEET
86	GL - 01	GROUNDING ELECTRODE	81 dari 89
87	GL - 02	GROUNDING INSPECTION PIT C/W COVER	81 dari 89
88	GL - 03	GROUNDING WIRE CONNECTOR ("C" SLEEVE COMPRESSION	82 dari 89
89	GL - 04	GROUNDING ELECTRODE AND WIRE CLAMP	82 dari 89
90	GL - 05	MOLD HORIZONTAL CROSS (EXOTHERMIC WELDING)	83 dari 89
91	GL - 06	MOLD HORIZONTAL TEE (EXOTHERMIC WELDING)	83 dari 89
92	GL - 07	GROUNDING LUG	84 dari 89
93	GL - 08	GROUNDING BAR	84 dari 89
94	GL - 11	AIR TERMINAL	85 dari 89
95	GL - 12	TESTING JOINT BOX	86 dari 89
96	GL - 13	EXOTHERMIC WELDING POWDER	87 dari 89
97	GL - 14	CONDUCTOR CLAMP	87 dari 89
98	GL - 15	T-JOINT TERMINAL	88 dari 89
99	GL - 16	TEST POINT GROUNDING MARKER	88 dari 89
100	GL - 17	LIGHTNING POLE	89 dari 89

NOTE:
1. ALL ITEMS SHALL BE VERIFIED AND FINALIZED BY EPC CONTRACTOR DURING EXECUTION STAGE.

OUTLINE

GALVANIZED (RSG) CONDUIT

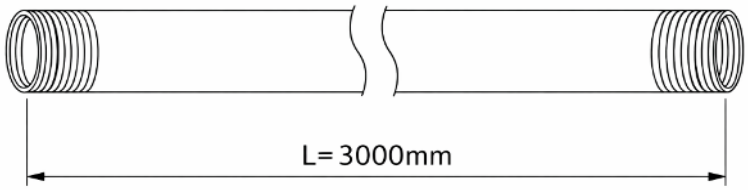

ID. NO. : RS - 01

NO.	GENERAL REQUIREMENTS	
1	COMPLIANCE STANDARD	ASTM / ANSI / IEC / SNI
2	EQUIPMENT DESCRIPTION	RIGID STEEL GALVANIZED (RSG) CONDUIT
3	MATERIAL	FLAT STEEL
4	FINISHED	HOT DIP GALVANIZED
5	LENGTH	3000mm
6	SIZE	M20, M25, M32, M40, M50, M63, M75, M90
7	THREAD	METRIC
8	THICKNESS	VTA (VENDOR TO ADVISE)
9	SERVICE	OUTDOOR INSTALLATION (STUB UP)

OUTLINE

COUPLING CONDUIT

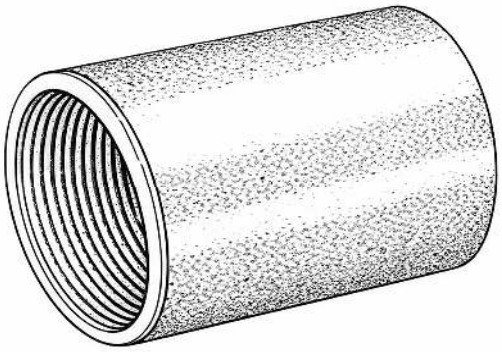

ID. NO. : RS - 02

NO.	GENERAL REQUIREMENTS	
1	COMPLIANCE STANDARD	ASTM / ANSI / IEC / SNI
2	EQUIPMENT DESCRIPTION	COUPLING CONDUIT
3	MATERIAL	FLAT STEEL
4	FINISHED	HOT DIP GALVANIZED
5	LENGTH	3000mm
6	SIZE	M20, M25, M32, M40, M50, M63, M75, M90
7	THREAD	METRIC
8	THICKNESS	VTA (VENDOR TO ADVISE)
9	SERVICE	OUTDOOR INSTALLATION (STUB UP)

OUTLINE

90° BENDS CONDUIT

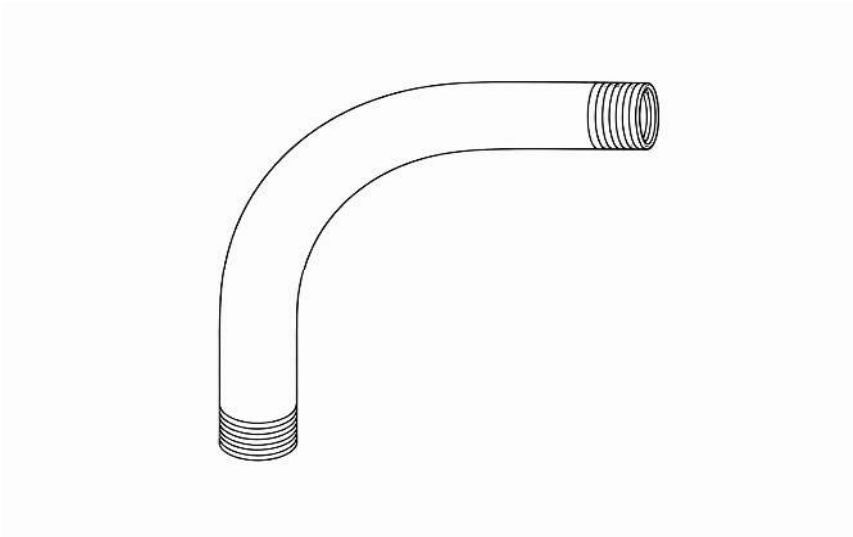

ID. NO. : RS - 03

NO.	GENERAL REQUIREMENTS	
1	COMPLIANCE STANDARD	ASTM / ANSI / IEC / SNI
2	EQUIPMENT DESCRIPTION	90° BENDS CONDUIT
3	MATERIAL	FLAT STEEL
4	FINISHED	HOT DIP GALVANIZED
5	LENGTH	3000mm
6	SIZE	M20, M25, M32, M40, M50, M63, M75, M90
7	THREAD	METRIC
8	THICKNESS	VTA (VENDOR TO ADVISE)
9	SERVICE	OUTDOOR INSTALLATION (STUB UP)

OUTLINE

INSULATED BUSHING

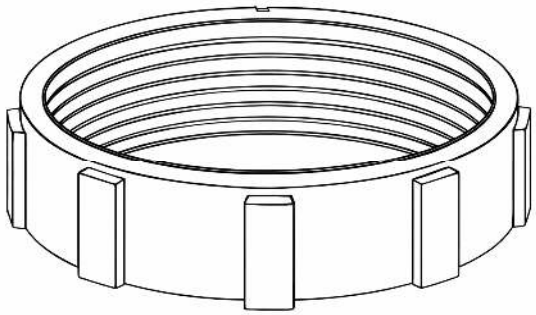

ID. NO. : RS - 04

NO.	GENERAL REQUIREMENTS	
1	COMPLIANCE STANDARD	ASTM / ANSI / IEC / SNI
2	EQUIPMENT DESCRIPTION	INSULATED BUSHING
3	MATERIAL	FLAT STEEL
4	FINISHED	HOT DIP GALVANIZED
5	LENGTH	3000mm
6	SIZE	M20, M25, M32, M40, M50, M63, M75, M90
7	THREAD	METRIC
8	THICKNESS	VTA (VENDOR TO ADVISE)
9	SERVICE	OUTDOOR SAFETY CABLE (STUB UP)

OUTLINE

ELECTRICAL METALIC TUBING (EMT)

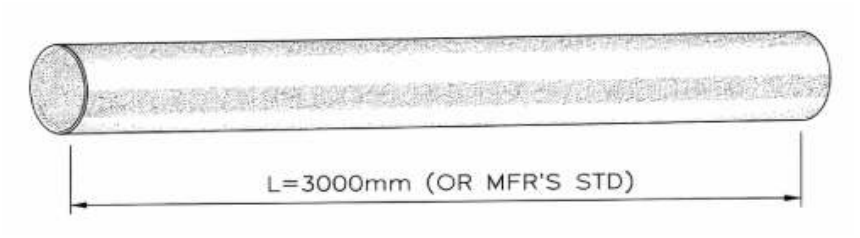

ID. NO. : EF - 01

NO.	GENERAL REQUIREMENTS	
1	COMPLIANCE STANDARD	ASTM / ANSI / IEC / SNI
2	EQUIPMENT DESCRIPTION	ELECTRICAL METALIC TUBING (EMT)
3	MATERIAL	FLAT STEEL
4	FINISHED	HOT DIP GALVANIZED
5	LENGTH	3000mm
6	SIZE	M20, M25, M32, M40, M50, M63, M75, M90
7	THICKNESS	VTA (VENDOR TO ADVISE)
8	SERVICE	OUTDOOR INSTALLATION (STUB UP)

OUTLINE

EMT SET SCREW (THREAD LESS) COUPLING

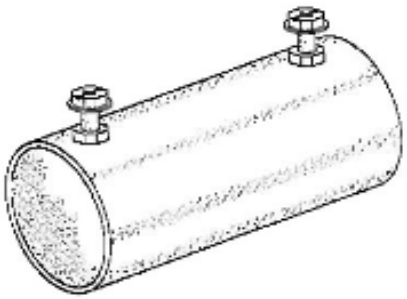

ID. NO. : EF - 02

NO.	GENERAL REQUIREMENTS	
1	COMPLIANCE STANDARD	ASTM / ANSI / IEC / SNI
2	EQUIPMENT DESCRIPTION	EMT SET SCREW (THREAD LESS) COUPLING
3	MATERIAL	FLAT STEEL
4	FINISHED	HOT DIP GALVANIZED
5	LENGTH	-
6	SIZE	M20, M25, M32, M40, M50, M63, M75, M90
7	THICKNESS	VTA (VENDOR TO ADVISE)
8	SERVICE	JOINTING EMT TO EMT

OUTLINE

CONDUIT FITTING SET SCREW (THREAD LESS) EMT. CONNECTOR

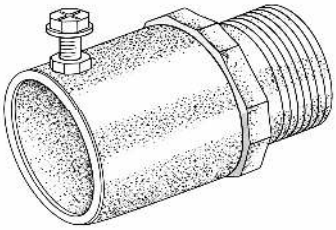

ID. NO. : EF - 03

NO.	GENERAL REQUIREMENTS	
1	COMPLIANCE STANDARD	ASTM / ANSI / IEC / SNI
2	EQUIPMENT DESCRIPTION	CONDUIT FITTING SET SCREW (THREAD LESS) EMT. CONNECTOR
3	MATERIAL	FLAT STEEL
4	FINISHED	HOT DIP GALVANIZED
5	LENGTH	-
6	SIZE	M20, M25, M32, M40, M50, M63, M75, M90
7	THICKNESS	VTA (VENDOR TO ADVISE)
8	SERVICE	JOINTING EMT CONDUIT TO JUNCTION BOX

OUTLINE

COMBINATION CONDUIT COUPLING

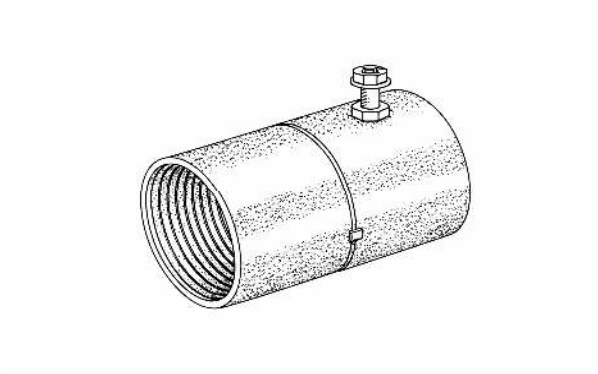

ID. NO. : EF - 04

NO.	GENERAL REQUIREMENTS	
1	COMPLIANCE STANDARD	ASTM / ANSI / IEC / SNI
2	EQUIPMENT DESCRIPTION	COMBINATION CONDUIT COUPLING
3	MATERIAL	FLAT STEEL
4	FINISHED	HOT DIP GALVANIZED
5	LENGTH	-
6	SIZE	M20, M25, M32, M40, M50, M63, M75, M90
7	THICKNESS	VTA (VENDOR TO ADVISE)
8	SERVICE	JOINTING EMT CONDUIT TO FLEXIBLE CONDUIT

OUTLINE

LIQUIDTIGHT CONNECTOR

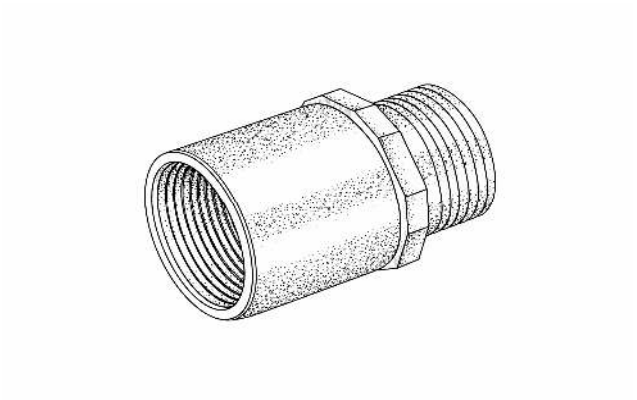

ID. NO. : EF - 05

NO.	GENERAL REQUIREMENTS	
1	COMPLIANCE STANDARD	ASTM / ANSI / IEC / SNI
2	EQUIPMENT DESCRIPTION	LIQUIDTIGHT CONNECTOR
3	MATERIAL	FLAT STEEL
4	FINISHED	HOT DIP GALVANIZED
5	LENGTH	-
6	SIZE	M20, M25, M32, M40, M50, M63, M75, M90
7	THICKNESS	VTA (VENDOR TO ADVISE)
8	SERVICE	JOINTING EMT DONDUIT TO JUNTION BOX

OUTLINE

FLEXIBLE CONDUIT

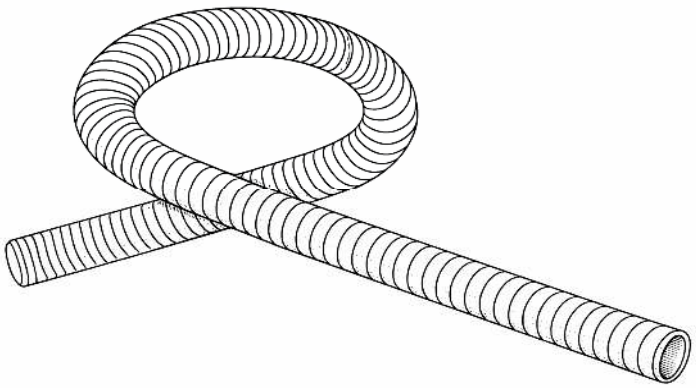

ID. NO. : EF - 06

NO.	GENERAL REQUIREMENTS	
1	COMPLIANCE STANDARD	ASTM / ANSI / IEC / SNI
2	EQUIPMENT DESCRIPTION	FLEXIBLE CONDUIT
3	MATERIAL	SHEET STEEL
4	FINISHED	GALVANIZED WITH GRAY PVC JACKET
5	LENGTH	-
6	SIZE	M20, M25, M32, M40, M50, M63, M75, M90
7	THICKNESS	VTA (VENDOR TO ADVISE)
8	SERVICE	JOINTING BOUNDING EMT CONDUIT TO ELECTRICAL EQUIPMENT

OUTLINE

ONE HOLE CLAMP

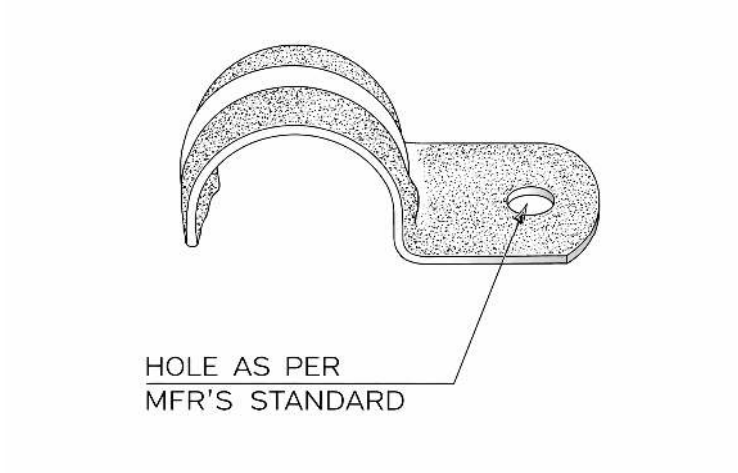

ID. NO. : EF - 07

NO.	GENERAL REQUIREMENTS	
1	COMPLIANCE STANDARD	ASTM / ANSI / IEC / SNI
2	EQUIPMENT DESCRIPTION	ONE HOLE CLAMP
3	MATERIAL	FLAT STEEL
4	FINISHED	HOT DIP GALVANIZED
5	LENGTH	-
6	SIZE	M20, M25, M32, M40, M50, M63, M75, M90
7	THICKNESS	VTA (VENDOR TO ADVISE)
8	SERVICE	CLAMP FOR CONDUIT

OUTLINE

CONDUIT CLAMP 2 HOLES

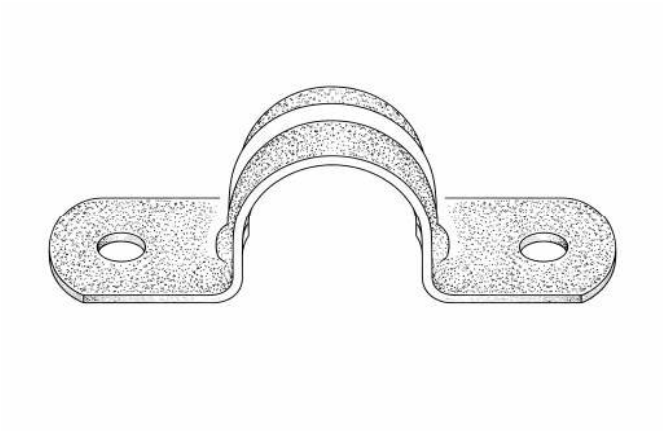

ID. NO. : EF - 08

NO.	GENERAL REQUIREMENTS	
1	COMPLIANCE STANDARD	ASTM / ANSI / IEC / SNI
2	EQUIPMENT DESCRIPTION	CONDUIT CLAMP 2 HOLES
3	MATERIAL	FLAT STEEL
4	FINISHED	HOT DIP GALVANIZED
5	LENGTH	-
6	SIZE	M20, M25, M32, M40, M50, M63, M75, M90
7	THICKNESS	VTA (VENDOR TO ADVISE)
8	SERVICE	CLAMP FOR CONDUIT

OUTLINE

PVC CONDUIT

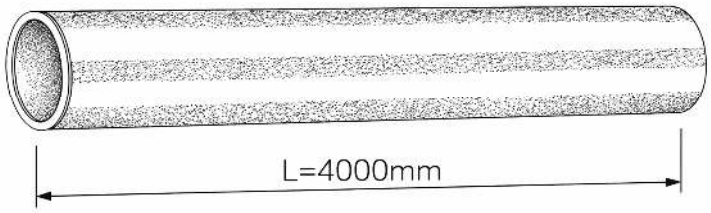

ID. NO. : PC - 01

NO.	GENERAL REQUIREMENTS	
1	COMPLIANCE STANDARD	ASTM / ANSI / IEC / SNI
2	EQUIPMENT DESCRIPTION	PVC CONDUIT
3	MATERIAL	PVC
4	FINISHED	NATURAL (WHITE COLOR)
5	LENGTH	4000mm
6	SIZE	M20, M25, M32, M40, M50, M63, M75, M90
7	THICKNESS	VTA (VENDOR TO ADVISE)
8	VENDOR	CLIPSAL OR EQUIVALENT AS PER AML
9	SERVICE	OUTDOOR INSTALLATION (STUB UP) FROM UNDERGROUND

OUTLINE

PVC ELBOW

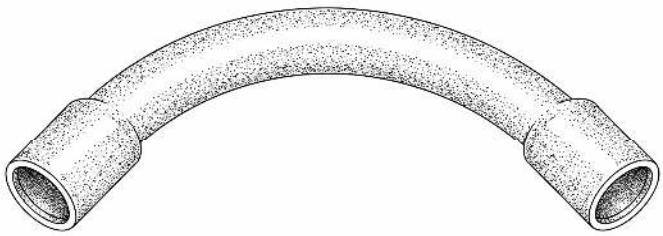

ID. NO. : PC - 02

NO.	GENERAL REQUIREMENTS	
1	COMPLIANCE STANDARD	ASTM / ANSI / IEC / SNI
2	EQUIPMENT DESCRIPTION	PVC ELBOW
3	MATERIAL	PVC
4	FINISHED	NATURAL (WHITE COLOR)
5	LENGTH	-
6	SIZE	M20, M25, M32, M40, M50, M63, M75, M90
7	THICKNESS	VTA (VENDOR TO ADVISE)
8	SERVICE	OUTDOOR INSTALLATION

OUTLINE

PVC CONDUIT ADAPTOR

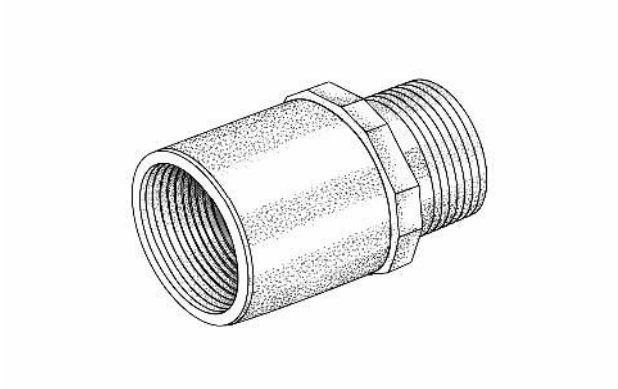

ID. NO. : PC - 03

NO.	GENERAL REQUIREMENTS	
1	COMPLIANCE STANDARD	ASTM / ANSI / IEC / SNI
2	EQUIPMENT DESCRIPTION	PVC CONDUIT ADAPTOR
3	MATERIAL	PVC
4	FINISHED	NATURAL
5	LENGTH	-
6	SIZE	M20, M25, M32, M40, M50, M63, M75, M90
7	THICKNESS	VTA (VENDOR TO ADVISE)
8	SERVICE	JOINTING PVC CONDUIT TO JUNCTION BOX

OUTLINE

WEATHER PROOF JUNCTION BOX (ROUND TYPE) / X-TYPE

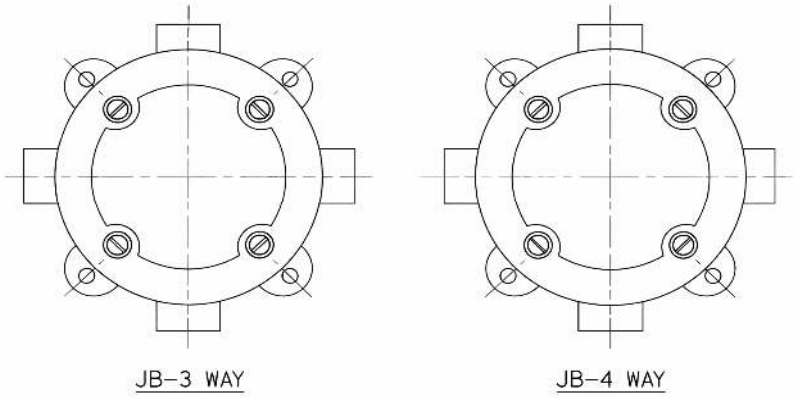

NOTE

1. C/W BLIND PLUG (ALL HOLES)& TERMINAL BLOCKS
2. DIMENSION : MFR'S STD
3. C/W BOLT & NUT FOR MOUNTING

ID. NO. : JB - 01

NO.	GENERAL REQUIREMENTS	
1	COMPLIANCE STANDARD	ASTM / ANSI / IEC / SNI / ATEX (STANDARD HAZARD)
2	EQUIPMENT DESCRIPTION	WEATHER PROOF JUNCTION BOX (ROUND TYPE) / X-TYPE
3	MATERIAL	STEEL / CAST IRON
4	FINISHED	HOT DIP GALVANIZED
5	SIZE	3 WAY X M20, 3 WAY X M25/4 WAY X M20, 4 WAY X M25
6	THREAD	METRIC
7	THICKNESS	VTA (VENDOR TO ADVISE)
8	SERVICE	OUTDOOR (NON HAZARDOUS) CONNECTION CABLE

OUTLINE

EXPLOSION PROOF JUNCTION BOX (ROUND TYPE) / X-TYPE

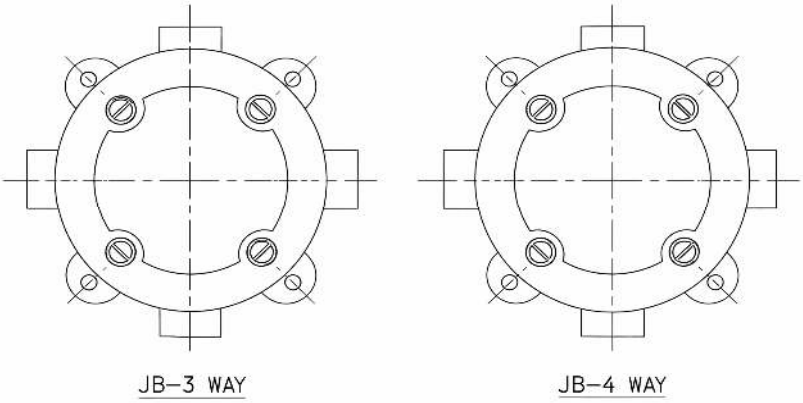

NOTE

1. C/W BLIND PLUG (ALL HOLES)& TERMINAL BLOCKS
2. DIMENSION : MFR'S STD
3. C/W BOLT & NUT FOR MOUNTING

ID. NO. : JB - 02

NO.	GENERAL REQUIREMENTS	
1	COMPLIANCE STANDARD	ASTM / ANSI / IEC / SNI
2	EQUIPMENT DESCRIPTION	EXPLOSION PROOF JUNCTION BOX (ROUND TYPE) / X-TYPE
3	MATERIAL	STEEL / CAST IRON
4	FINISHED	HOT DIP GALVANIZED
5	LENGTH	-
6	SIZE	3 WAY X M20, 3 WAY X M25/4 WAY X M20, 4 WAY X M25
7	THREAD	METRIC
8	THICKNESS	VTA (VENDOR TO ADVISE)
9	SERVICE	CONNECTION CABLE IN HAZARDOUS AREA, CLASS 1 ZONE 2, GAS GROUP IIA, TEMP. CLASS T3

OUTLINE

WEATHER PROOF JUNCTION BOX (SQUARE TYPE)

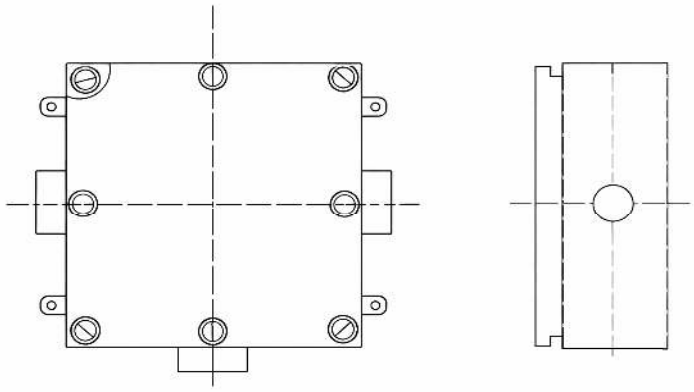

NOTE

1. C/W BLIND PLUG (ALL HOLES)& TERMINAL BLOCKS
2. DIMENSION : MFR'S STD
3. C/W BOLT & NUT FOR MOUNTING

ID. NO. : JB - 03

NO.	GENERAL REQUIREMENTS	
1	COMPLIANCE STANDARD	ASTM / ANSI / IEC / SNI / ATEX (STANDARD HAZARD)
2	EQUIPMENT DESCRIPTION	WEATHER PROOF, HAZARD JUNCTION BOX (SQUARE TYPE)
3	MATERIAL	STEEL
4	FINISHED	HOT DIP GALVANIZED
5	LENGTH	-
6	SIZE	3 WAY X M20, 3 WAY X M25
7	THREAD	METRIC
8	THICKNESS	VTA (VENDOR TO ADVISE)
9	SERVICE	OUTDOOR (NON HAZARDOUS) CONNECTION CABLES

OUTLINE

EXPLOSION PROOF JUNCTION BOX (SQUARE TYPE)

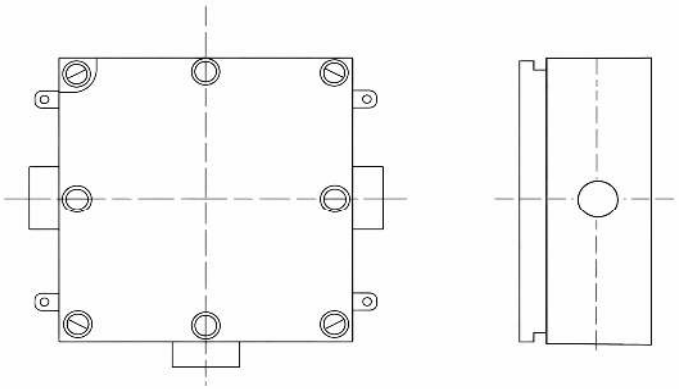

NOTE

1. C/W BLIND PLUG (ALL HOLES)& TERMINAL BLOCKS
2. DIMENSION : MFR'S STD
3. C/W BOLT & NUT FOR MOUNTING

ID. NO. : JB - 04

NO.	GENERAL REQUIREMENTS	
1	COMPLIANCE STANDARD	ASTM / ANSI / IEC / SNI
2	EQUIPMENT DESCRIPTION	EXPLOSION PROOF JUNCTION BOX (SQUARE TYPE)
3	MATERIAL	STEEL
4	FINISHED	HOT DIP GALVANIZED
5	LENGTH	-
6	SIZE	3 WAY X M20, 3 WAY X M25
7	THREAD	METRIC
8	THICKNESS	VTA (VENDOR TO ADVISE)
9	SERVICE	CONNECTION CABLE IN HAZARDOUS AREA, CLASS 1 ZONE 2, GAS GROUP IIA, TEMP. CLASS T3

OUTLINE

JUNCTION BOX (SQUARE TYPE)

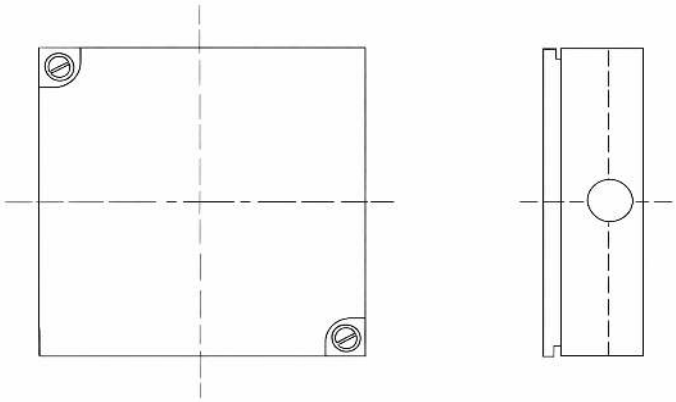

NOTE

1. DIMENSION : MFR'S STD
2. C/W BOLT & NUT FOR MOUNTING

ID. NO. : JB - 05

NO.	GENERAL REQUIREMENTS	
1	COMPLIANCE STANDARD	ASTM / ANSI / IEC / SNI
2	EQUIPMENT DESCRIPTION	JUNCTION BOX (SQUARE TYPE)
3	MATERIAL	STEEL PLATE
4	FINISHED	ZINC PLATED
5	THICKNESS	VTA (VENDOR TO ADVISE)
6	SERVICE	OUTDOOR INSTALLATION (STUB UP)

OUTLINE

JUNCTION BOX (SQUARE TYPE)

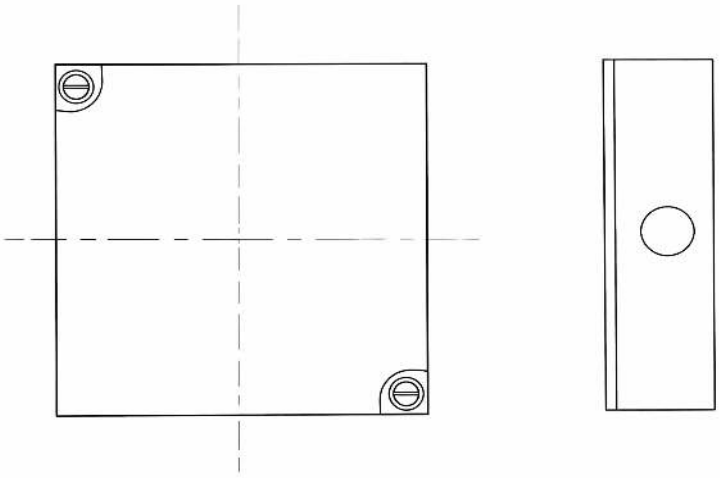

NOTE

1. DIMENSION : MF
2. C/W BOLT & NUT FOR MOUNTING

ID. NO. : JB - 06

NO.	GENERAL REQUIREMENTS	
1	COMPLIANCE STANDARD	ASTM / ANSI / IEC / SNI
2	EQUIPMENT DESCRIPTION	JUNCTION BOX (SQUARE TYPE)
3	MATERIAL	PVC
4	FINISHED	NATURAL
5	THICKNESS	VTA (VENDOR TO ADVISE)
6	SERVICE	OUTDOOR (NON HAZARDOUS) CONNECTION CABLES

OUTLINE

CABLE GLAND (EXPLOSION PROOF)

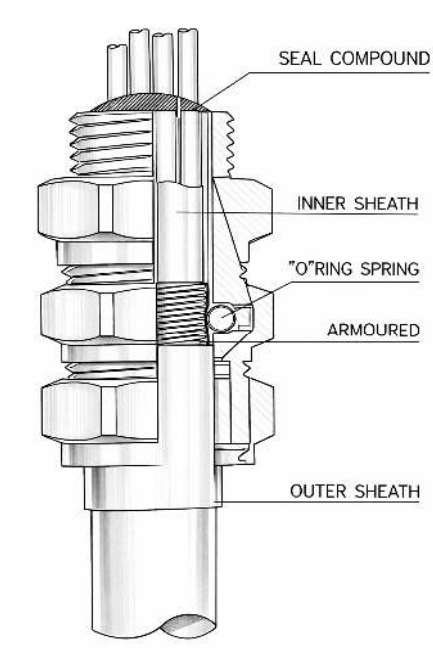

NOTE

1. FOR ARMOURED STEEL WIRE & TAPE ARMOURED CABLE
2. C/W INNER SEAL, OUTER SEAL, LOCK NUT, EARTH TAG AND FLAT WASHER, PVC SHROUD

ID. NO. : CG - 01

NO.	GENERAL REQUIREMENTS	
1	COMPLIANCE STANDARD	ASTM / ANSI / IEC / SNI / ATEX (STANDARD HAZARD)
2	EQUIPMENT DESCRIPTION	CABLE GLAND (EXPLOSION PROOF), HAZARD TYPE
3	MATERIAL	BRASS NICKLED PLATED
4	FINISHED	NATURAL
5	SIZE	M20, M25, M32, M40, M50, M63, M75, M90
6	THREAD	METRIC
7	SERVICE	HAZARDOUS AREA, CLASS 1 ZONE 2, GAS GROUP IIA, TEMP. CLASS T3

OUTLINE

CABLE GLAND (NON EXPLOSION PROOF)

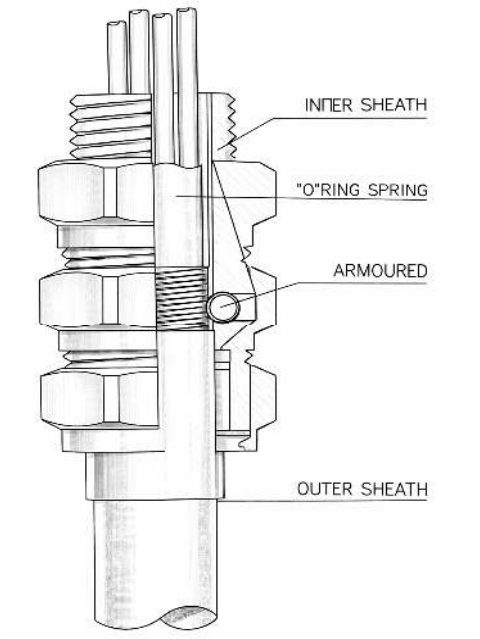

NOTE

1. FOR ARMOURED STEEL WIRE & TAPE ARMOURED CABLE
2. C/W INNER SEAL, OUTER SEAL, LOCK NUT, EARTH TAG AND FLAT WASHER, PVC SHROUD

ID. NO. : CG - 02

NO.	GENERAL REQUIREMENTS	
1	COMPLIANCE STANDARD	ASTM / ANSI / IEC / SNI
2	EQUIPMENT DESCRIPTION	CABLE GLAND (NON EXPLOSION PROOF)
3	MATERIAL	BRASS NICKLED PLATED
4	FINISHED	NATURAL
5	SIZE	M20, M25, M32, M40, M50, M63, M75, M90
6	THREAD	METRIC
7	SERVICE	INDUSTRIAL TYPE, IP 55

OUTLINE

CABLE GLAND (EXPLOSION PROOF)

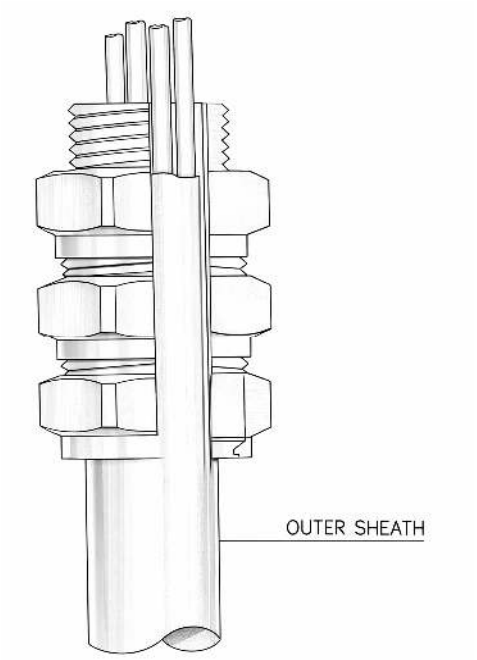

NOTE

1. FOR NON ARMOURED CABLE
2. C/W INNER SEAL, OUTER SEAL, LOCK NUT, EARTH TAG AND FLAT WASHER, PVC SHROUD

ID. NO. : CG - 03

NO.	GENERAL REQUIREMENTS	
1	COMPLIANCE STANDARD	ASTM / ANSI / IEC / SNI / ATEX (STANDARD HAZARD)
2	EQUIPMENT DESCRIPTION	CABLE GLAND (EXPLOSION PROOF), HAZARD TYPE
3	MATERIAL	BRASS NICKLED PLATED
4	FINISHED	NATURAL
5	SIZE	M20, M25, M32, M40, M50, M63, M75, M90
6	THREAD	METRIC
7	SERVICE	HAZARDOUS AREA, CLASS 1 ZONE 2, GAS GROUP IIA, TEMP. CLASS T3

OUTLINE

CABLE GLAND (NON EXPLOSION PROOF)

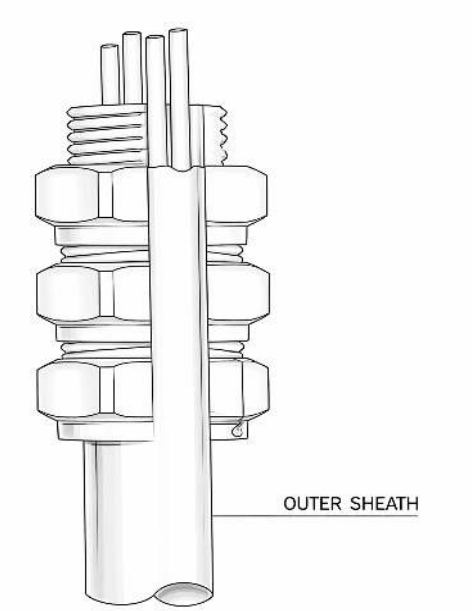

NOTE

1. FOR NON ARMOURED CABLE
2. C/W INNER SEAL, OUTER SEAL, LOCK NUT, EARTH TAG AND FLAT WASHER, PVC SHROUD

ID. NO. : CG - 04

NO.	GENERAL REQUIREMENTS	
1	COMPLIANCE STANDARD	ASTM / ANSI / IEC / SNI
2	EQUIPMENT DESCRIPTION	CABLE GLAND (NON EXPLOSION PROOF)
3	MATERIAL	BRASS NICKLED PLATED
4	FINISHED	NATURAL
5	SIZE	M20, M25, M32, M40, M50, M63, M75, M90
6	THREAD	METRIC
7	SERVICE	INDUSTRIAL TYPE, IP 55

OUTLINE

EARTH TAGS

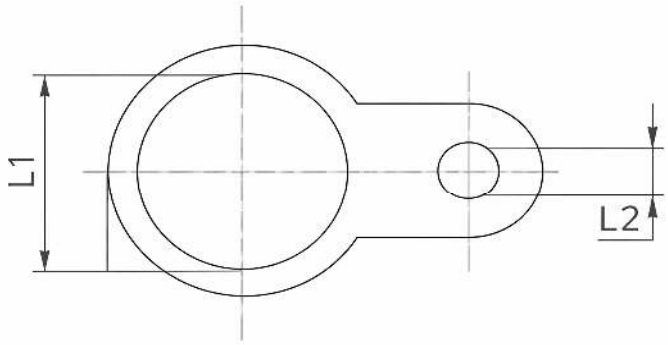

NOTE

1. C/W BOLT & NUT STAINLESS STEEL 304

ID. NO. : CG - 05

NO.	GENERAL REQUIREMENTS	
1	COMPLIANCE STANDARD	ASTM / ANSI / IEC / SNI
2	EQUIPMENT DESCRIPTION	EARTH TAGS
3	MATERIAL	BRASS NICKLED PLATED
4	FINISHED	NATURAL
5	SIZE (L1)	M20, M25, M32, M40, M50, M63, M75, M90
6	SIZE (L2)	7.0, 10.5, 12.2, 13.6, 13.5, 13.5, 13.5, 14.0
7	THREAD	METRIC FOR CABLE GLAND
8	THICKNESS	VTA (VENDOR TO ADVISE)
9	SERVICE	GROUNDING CABLE GLAND FOR PANEL

OUTLINE

LOCKNUT

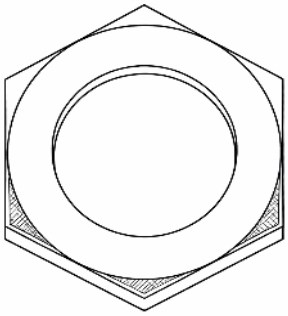

ID. NO. : CG - 06

NO.	GENERAL REQUIREMENTS	
1	COMPLIANCE STANDARD	ASTM / ANSI / IEC / SNI
2	EQUIPMENT DESCRIPTION	LOCKNUT
3	MATERIAL	BRASS NICKLED PLATED
4	FINISHED	NATURAL
5	SIZE	M20, M25, M32, M40, M50, M63, M75, M90
6	THREAD	METRIC FOR CABLE GLAND
7	THICKNESS	VTA (VENDOR TO ADVISE)
8	SERVICE	ACCESSORIES FOR CABLE GLAND

OUTLINE

PVC SHROUDS

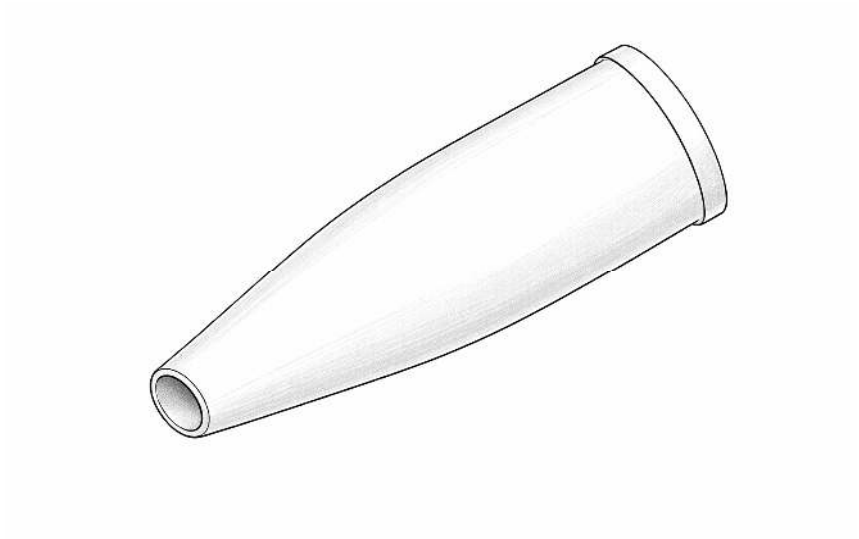

ID. NO. : CG - 07

NO.	GENERAL REQUIREMENTS	
1	COMPLIANCE STANDARD	ASTM / ANSI / IEC / SNI
2	EQUIPMENT DESCRIPTION	PVC SHROUDS
3	MATERIAL	BLACK PVC
4	FINISHED	NATURAL
5	SIZE	M20, M25, M32, M40, M50, M63, M75, M90
6	THICKNESS	VTA (VENDOR TO ADVISE)
7	SERVICE	ACCESSORIES CABLE GLAND

OUTLINE

CABLE GLAND SERRATED WASHER

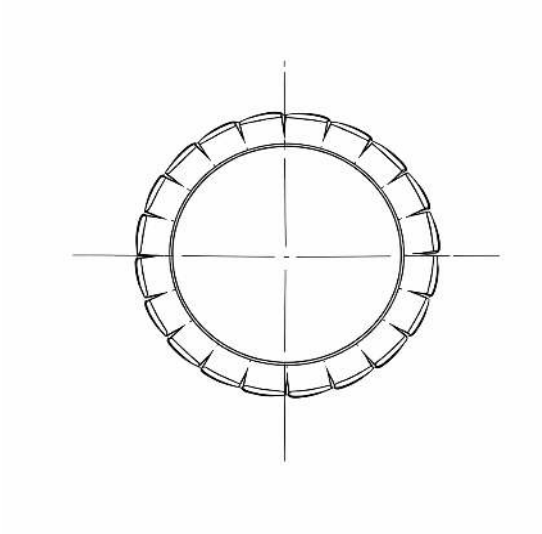

NOTE

1. FOR THREADED CABLE GLANDS
2. FOR GLAND TO NON METALIC ENCLOSURE

ID. NO. : CG - 08

NO.	GENERAL REQUIREMENTS	
1	COMPLIANCE STANDARD	ASTM / ANSI / IEC / SNI
2	EQUIPMENT DESCRIPTION	CABLE GLAND SERRATED WASHER
3	MATERIAL	STAINLESS STEEL
4	FINISHED	NATURAL
5	SIZE	M20, M25, M32, M40, M50, M63, M75, M90
6	THICKNESS	VTA (VENDOR TO ADVISE)
7	SERVICE	ACCESSORIES CABLE GLAND

OUTLINE

HEAT SHRINKABLE SLEEVE

NOTE

1. FOR WIRE INDICATOR
2. AVAILABLE SIZES ARE:

DESCRIPTION	SIZE
BLACK COLOUR BROWN COLOUR GREY COLOUR BLUE COLOUR	CORE CABLE Dia. 400mm²
	CORE CABLE Dia. 300mm²
	CORE CABLE Dia. 240mm²
	CORE CABLE Dia. 185mm²
	CORE CABLE Dia. 150mm²
	CORE CABLE Dia. 120mm²
	CORE CABLE Dia. 95mm²
	CORE CABLE Dia. 70mm²
	CORE CABLE Dia. 50mm²
	CORE CABLE Dia. 35mm²
	CORE CABLE Dia. 25mm²
	CORE CABLE Dia. 16mm²
	CORE CABLE Dia. 10mm²
	CORE CABLE Dia. 6mm²
	CORE CABLE Dia. 4mm²

DESCRIPTION	SIZE
GREEN STRIP YELLOW COLOUR	CORE CABLE Dia. 70mm²
	CORE CABLE Dia. 50mm²
	CORE CABLE Dia. 35mm²
	CORE CABLE Dia. 16mm²

ID. NO. : CG - 09

NO.	GENERAL REQUIREMENTS	
1	COMPLIANCE STANDARD	ASTM / ANSI / IEC / SNI
2	EQUIPMENT DESCRIPTION	HEAT SHRINKABLE SLEEVE
3	MATERIAL	POLYOLEFIN
4	FINISHED	-
5	SIZE	-
6	THICKNESS	VTA (VENDOR TO ADVISE)
7	SERVICE	CABLE INSULATION

OUTLINE

PRE - INSULATED TERMINAL LUG

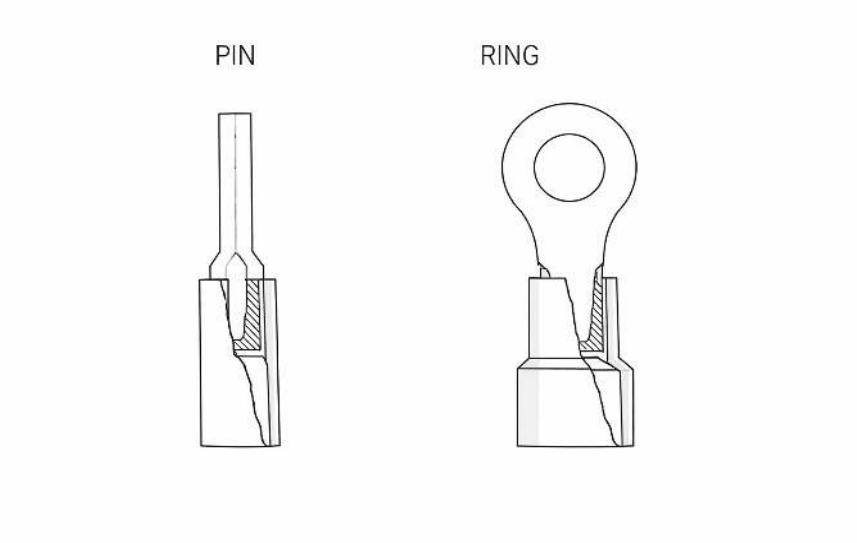

NOTE

1. FOR FLAT STEEL WIRE & TAPE ARMOURED CABLE
2. DIMENSION : MFR'S STD

ID. NO. : CA - 01

NO.	GENERAL REQUIREMENTS	
1	COMPLIANCE STANDARD	ASTM / ANSI / IEC / SNI
2	EQUIPMENT DESCRIPTION	PRE - INSULATED TERMINAL LUG
3	MATERIAL	COPPER
4	FINISHED	TIN PLATED
5	INSULATING MATERIAL	PVC
6	SIZE	1.5mm² OR 2.5mm², TYPE PIN TERMINAL, RING TERMINAL
7	THICKNESS	VTA (VENDOR TO ADVISE)
8	SERVICE	CONNECTOR CABLE TO ELECTRICAL EQUIPMENT

OUTLINE

TERMINAL LUG (COMPRESSION TYPE)

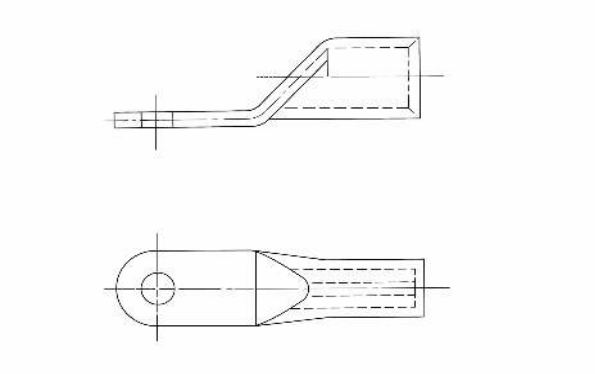

NOTE

1. AVAILABLE SIZES ARE:

SIZE mm²	BOLT Ø
4	M5
6	M5
10	M6
16	M6
25	M8
35	M10
50	M10

SIZE mm²	BOLT Ø
70	M10
95	M12
120	M12
150	M16
185	M16
240	M16
300	M16

ID. NO. : CA - 02

NO.	GENERAL REQUIREMENTS	
1	COMPLIANCE STANDARD	ASTM / ANSI / IEC / SNI
2	EQUIPMENT DESCRIPTION	TERMINAL LUG (COMPRESSION TYPE)
3	MATERIAL	COPPER
4	FINISHED	TIN PLATED
8	THICKNESS	VTA (VENDOR TO ADVISE)
9	SERVICE	CONNECTOR CABLE TO ELECTRICAL EQUIPMENT

OUTLINE

SCREW WIRE CONNECTOR

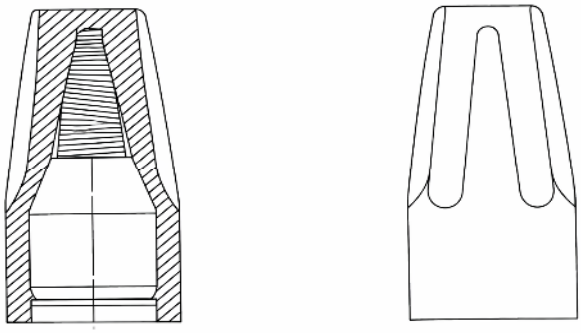

NOTE

1. NYLON INSULATED, SCREW TYPE
2. COLOR : MFR'S STANDARD

ID. NO. : CA - 03

NO.	GENERAL REQUIREMENTS	
1	COMPLIANCE STANDARD	ASTM / ANSI / IEC / SNI
2	EQUIPMENT DESCRIPTION	SCREW WIRE CONNECTOR
3	MATERIAL	HIGH CONDUCTIVITY COPPER
4	FINISHED	COPPER TINNED
5	SIZE	2.5mm², 4mm², 6mm², 10mm²
6	SERVICE	TWISTING, CONNECTOR ELECTRICAL CABLE

OUTLINE

BEAM CLAMP

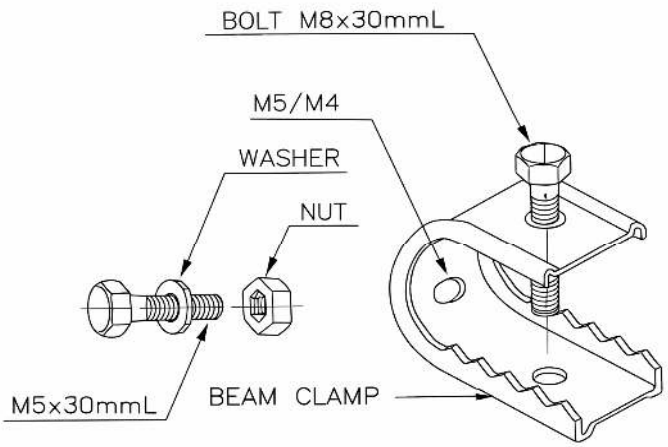

NOTE

1. WITH TAPPED HOLES BACK & BOTTOM

ID. NO. : CA - 05

NO.	GENERAL REQUIREMENTS	
1	COMPLIANCE STANDARD	ASTM / ANSI / IEC / SNI
2	EQUIPMENT DESCRIPTION	BEAM CLAMP
3	MATERIAL	BODY : STEEL, BOLT & WASHER: STAINLESS STEEL SS-304
4	FINISHED	BODY : HOT DIP GALVANIZED
5	THICKNESS	VTA (VENDOR TO ADVISE)
6	SERVICE	STEEL STRUCTURE

OUTLINE

CABLE SADDLE

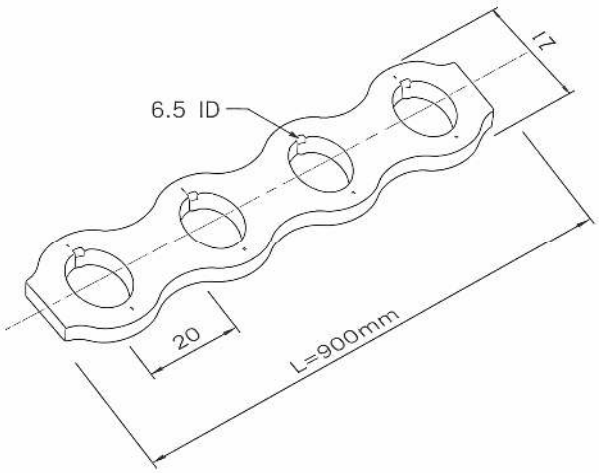

ID. NO. : CA - 06

NO.	GENERAL REQUIREMENTS	
1	COMPLIANCE STANDARD	ASTM / ANSI / IEC / SNI
2	EQUIPMENT DESCRIPTION	CABLE SADDLE
3	MATERIAL	STEEL
4	FINISHED	PVC COATED
5	THICKNESS	VTA (VENDOR TO ADVISE)
6	SERVICE	CABLE CLAMP

OUTLINE

CABLE TIE

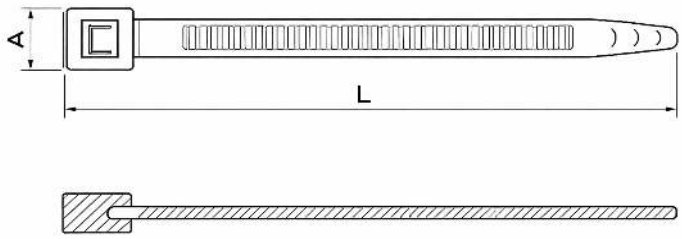

NOTE

1. ULTRA VIOLET PROOF TYPE
2. AVAILABLE SIZES ARE:

A (mm)	L (mm)
2.5	120
4	200
8	240
8	375

ID. NO. : CA - 07

NO.	GENERAL REQUIREMENTS	
1	COMPLIANCE STANDARD	ASTM / ANSI / IEC / SNI
2	EQUIPMENT DESCRIPTION	CABLE TIE
3	MATERIAL	NYLON
4	FINISHED	NATURAL (BLACK COLOR)
5	THICKNESS	VTA (VENDOR TO ADVISE)
6	SERVICE	CABLE CLAMP

OUTLINE

WIRE MARKER (Z-TYPE MARKER, STRAIGHT)

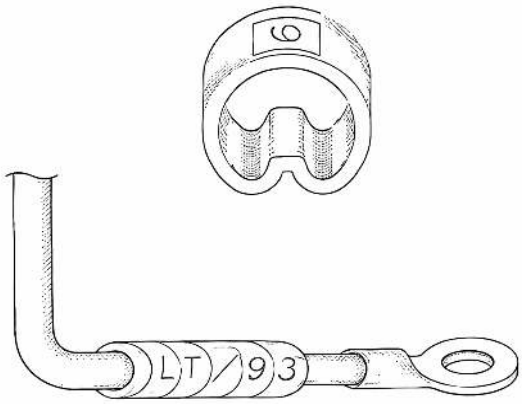

ID. NO. : CA - 08

NO.	GENERAL REQUIREMENTS	
1	COMPLIANCE STANDARD	ASTM / ANSI / IEC / SNI
2	EQUIPMENT DESCRIPTION	WIRE MARKER (Z-TYPE MARKER, STRAIGHT)
3	MATERIAL	PVC
4	FINISHED	NATURAL
5	COLOR	YELLOW BODY MARKED BLACK
6	SIZE	WIRE = 1.5mm², 2.5mm², 4mm²
7	MARKED	A~Z, 0~9, AND "_"
8	THICKNESS	VTA (VENDOR TO ADVISE)
9	SERVICE	MARKER CABLE, INTERNAL PANEL

OUTLINE

CARRIER STRIP FOR (K-TYPE MARKER)

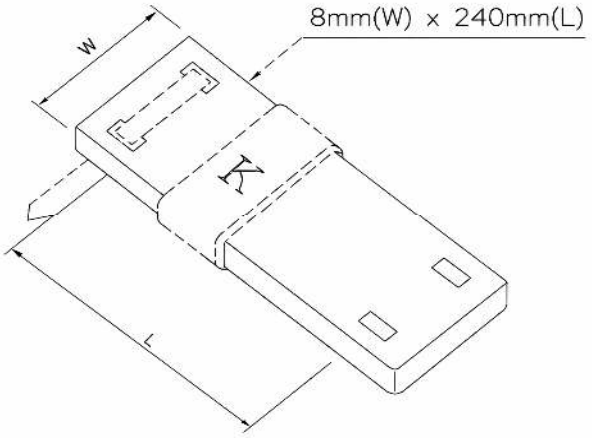

ID. NO. : CA - 09

NO.	GENERAL REQUIREMENTS	
1	COMPLIANCE STANDARD	ASTM / ANSI / IEC / SNI
2	EQUIPMENT DESCRIPTION	CARRIER STRIP FOR (K-TYPE MARKER)
3	MATERIAL	SEMI-RIGID BLACK PVC
4	FINISHED	NATURAL
5	COLOR	BLACK
6	SIZE	1,8mm(t) x 8,3mm(W) x 1,8Digits(L) OR MFR'S STANDARD Min. 18Digits(L)
7	THICKNESS	VTA (VENDOR TO ADVISE)
8	SERVICE	MARKER CABLE, INDOOR AREA

OUTLINE

K-TYPE MARKERS, (ELLIPTICAL PROFILE)

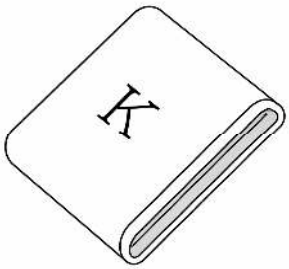

ID. NO. : CA - 10

NO.	GENERAL REQUIREMENTS	
1	COMPLIANCE STANDARD	ASTM / ANSI / IEC / SNI
2	EQUIPMENT DESCRIPTION	K-TYPE MARKERS, (ELLIPTICAL PROFILE)
3	MATERIAL	PVC
4	FINISHED	NATURAL
5	COLOR	YELLOW BODY MARKED BLACK
6	SIZE	FOR ITEM NO. CA - 05
7	THICKNESS	VTA (VENDOR TO ADVISE)
8	SERVICE	MARKER CABLE, INDOOR AREA

OUTLINE

GENERAL REQUIREMENTS

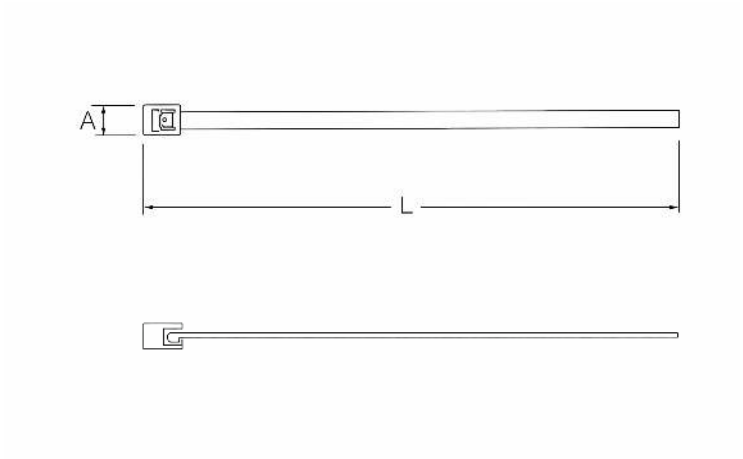

NOTE

1. ULTRA VIOLET PROOF TYPE
2. AVAILABLE SIZES ARE:

A (mm)	L (mm)
2.5	120
4	200
8	240
8	375

ID. NO. : CA - 11

NO.	GENERAL REQUIREMENTS	
1	COMPLIANCE STANDARD	ASTM / ANSI / IEC / SNI
2	EQUIPMENT DESCRIPTION	CABLE TIE
3	MATERIAL	STAINLESS STEEL SS-304
4	FINISHED	NATURAL
5	THICKNESS	VTA (VENDOR TO ADVISE)
6	SERVICE	CABLE CLAMP

OUTLINE

CABLE MARKER / METAL STAMP TYPE

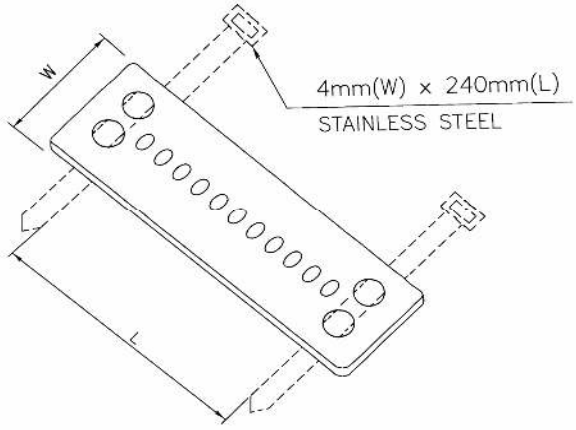

NOTE

1. C/W 2 PCS CABLE TIES SS

ID. NO. : CA - 12

NO.	GENERAL REQUIREMENTS	
1	COMPLIANCE STANDARD	ASTM / ANSI / IEC / SNI
2	EQUIPMENT DESCRIPTION	CABLE MARKER / METAL STAMP TYPE
3	MATERIAL	STAINLESS STEEL SS-304
4	FINISHED	NATURAL
5	SIZE	0.4mm(t) x 19.1mm(W) x 64mm(L)
6	THICKNESS	VTA (VENDOR TO ADVISE)
7	SERVICE	MARKER CABLE, OUTDOOR AREA

OUTLINE

CABLE ROUTE MARKER POST

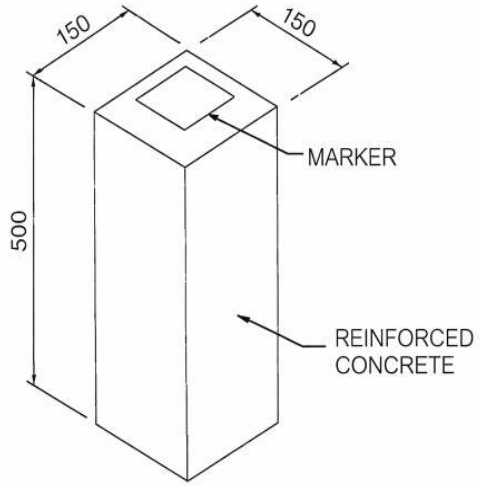

NOTE

1. ENGRAVED WITH APPROPRIATE SYMBOL (RED COLOR), BACKGROUND (YELLOW)

ID. NO. : CA - 13

NO.	GENERAL REQUIREMENTS	
1	COMPLIANCE STANDARD	ASTM / ANSI / IEC / SNI
2	EQUIPMENT DESCRIPTION	CABLE ROUTE MARKER POST
3	MATERIAL	REINFORCED CONCRETE
4	FINISHED	GROUTING
5	SERVICE	CABLE ROUTE MARKER, OUTDOOR AREA

OUTLINE

CABLE ROUTE MARKER SYMBOL

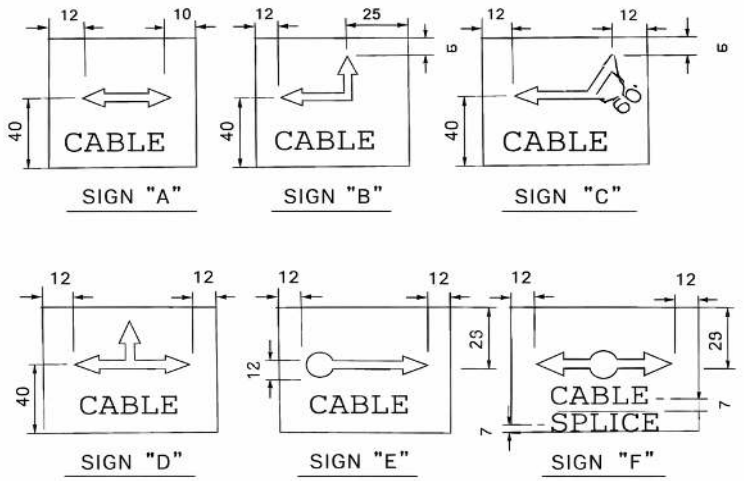

NOTE

1. THICKNESS OF PLATE = 1.2mm
2. ENGRAVED WITH APPROPRIATE SYMBOL (RED COLOR)

ID. NO. : CA - 14

NO.	GENERAL REQUIREMENTS	
1	COMPLIANCE STANDARD	ASTM / ANSI / IEC / SNI
2	EQUIPMENT DESCRIPTION	CABLE ROUTE MARKER SYMBOL
3	MATERIAL	CONCRETE
4	FINISHED	PAINTING
5	SERVICE	DIRECTION FOR CABLE ROUTE, OUTDOOR AREA

OUTLINE

RED CONCRETE TILE

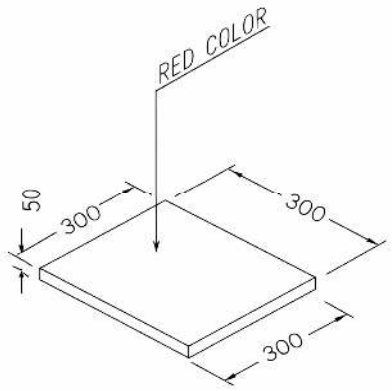

NOTE

1. BRAND REFERENCE : N/A

ID. NO. : CA - 15

NO.	GENERAL REQUIREMENTS	
1	COMPLIANCE STANDARD	ASTM / ANSI / IEC / SNI
2	EQUIPMENT DESCRIPTION	RED CONCRETE TILE
3	MATERIAL	REINFORCE CONCRETE W/ WIRE MESH
4	FINISHED	NATURAL, RED SURFACE COLOR
5	SERVICE	ACCESSORIES CABLE GLAND

OUTLINE

YELLOW WARNING TAPE

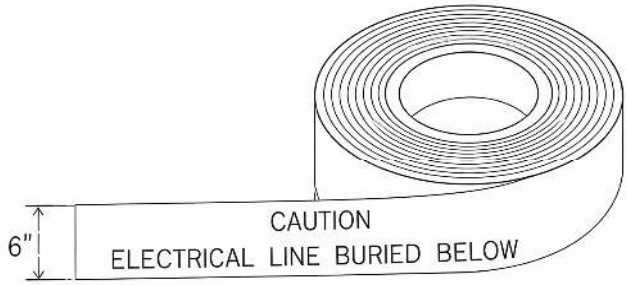

NOTE

1. WARN OF BURIED ELECTRICAL LINE BELOW
2. HAZARD TAPE

ID. NO. : CA - 16

NO.	GENERAL REQUIREMENTS	
1	COMPLIANCE STANDARD	ASTM / ANSI / IEC / SNI
2	EQUIPMENT DESCRIPTION	YELLOW WARNING TAPE
3	MATERIAL	GMPE POLYETHYLENE NON ADHESIVE
4	CONSTRUCTION	YELLOW COLOR WITH BLACK LETTERING
5	SIZE	6" WIDTH, 1000' LENGTH
6	THICKNESS	VTA (VENDOR TO ADVISE)
7	SERVICE	SIGNING PROTECTION FOR DIRECT BURIED CABLE

OUTLINE

PVC INSULATION TAPES, FOR FINAL WRAPPING OF CABLE TERMINATION

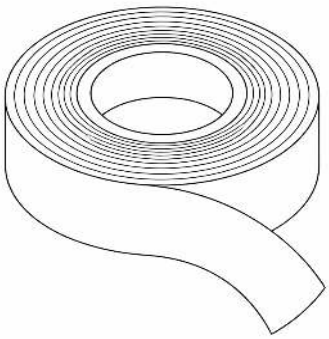

NOTE

1. FOR FLAT STEEL WIRE & TAPE ARMOURED CABLE
2. DIMENSION : MFR'S STD

WIDTH	COLOR	COLOR	LENGTH
3/4"	Black	Scotch 88	66 FT
	Brown	Scotch 35	60 FT
	Red		
	Yellow		
	Green		
	Blue		

ID. NO. : CA - 17

NO.	GENERAL REQUIREMENTS	
1	COMPLIANCE STANDARD	ASTM / ANSI / IEC / SNI
2	EQUIPMENT DESCRIPTION	PVC INSULATION TAPES, FOR FINAL WRAPPING OF CABLE TERMINATION
3	MATERIAL	PVC
4	FINISHED	MFR'S STANDARD
5	SERVICE	INSULATION CABLE

OUTLINE

RUBBER INSULATION TAPE (RUBBER BASE)

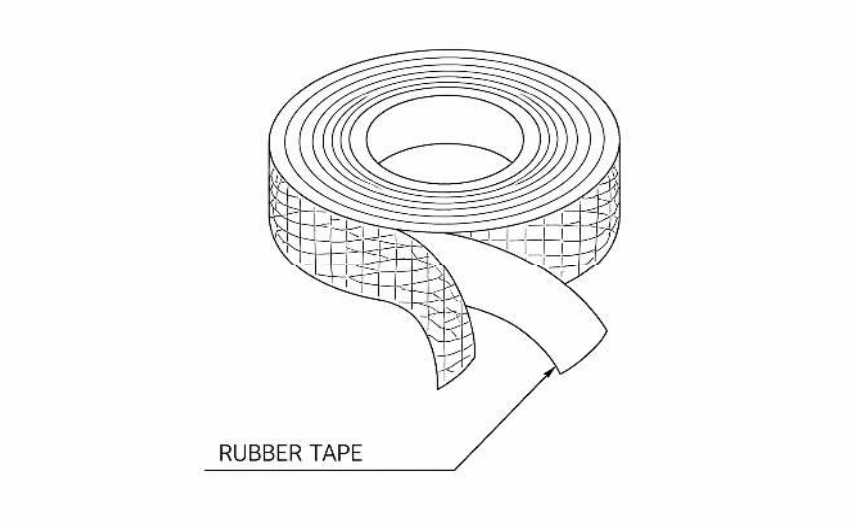

NOTE

1. AVAILABLE SIZES ARE:

WIDTH	COLOR	LENGTH
3/4"	Black	30 FT

ID. NO. : CA - 18

NO.	GENERAL REQUIREMENTS	
1	COMPLIANCE STANDARD	ASTM / ANSI / IEC / SNI
2	EQUIPMENT DESCRIPTION	RUBBER INSULATION TAPE (RUBBER BASE)
3	MATERIAL	RUBBER, SCOTCH 23
4	FINISHED	MFR'S STANDARD
5	SERVICE	CONNECTOR CABLE TO ELECTRICAL EQUIPMENT

OUTLINE

SEALING COMPOUND (NON HARDENING TYPE)

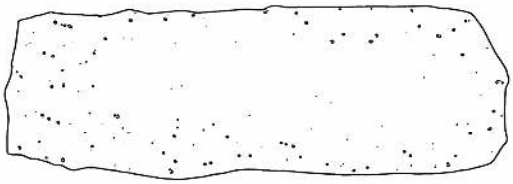

SEALING COMPOUND

ID. NO. : CA - 19

NO.	GENERAL REQUIREMENTS	
1	COMPLIANCE STANDARD	ASTM / ANSI / IEC / SNI
2	EQUIPMENT DESCRIPTION	SEALING COMPOUND (NON HARDENING TYPE)
3	MATERIAL	EPOXY
4	FINISHED	MFR'S STANDARD
5	SIZE	MFR'S STANDARD
6	COLOR	GREY
7	WEIGHT	2 KG
8	SERVICE	PREVENTING GAS LEAK OR LIQUID

OUTLINE

U - TYPE BOLT

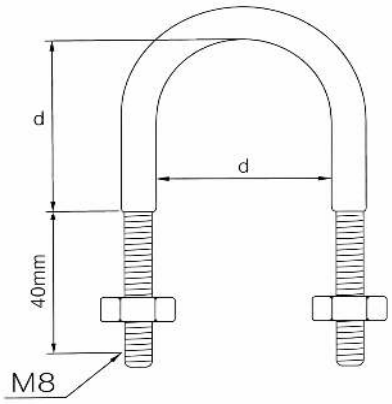

NOTE

1. C/W 2 NUTS & WASHER (STAINLESS STEEL)

ID. NO. : BN - 01

NO.	GENERAL REQUIREMENTS	
1	COMPLIANCE STANDARD	ASTM / ANSI / IEC / SNI
2	EQUIPMENT DESCRIPTION	U - TYPE BOLT
3	MATERIAL	STAINLESS STEEL SS-304
4	FINISHED	NATURAL
5	SIZE	(d) ¼",1 ½", 2"
6	THICKNESS	VTA (VENDOR TO ADVISE)
7	SERVICE	SUPPORT FOR CABLE OR CONDUIT AT STEEL STRUCTURE

OUTLINE

BOLT & NUT (HEXAGONAL) FULL THREAD

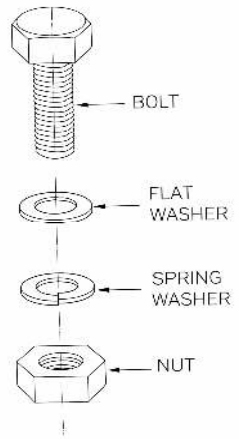

NOTE

1. C/W FLAT WASHER AND SPRING WASHER
2. AVAILABLE SIZES ARE:

Nom. Size	Length
M4	20 mmL (OR MRF'S Std)
M6	30 mmL (OR MRF'S Std)
M8	30 mmL (OR MRF'S Std)
M10	30 mmL (OR MRF'S Std)
M10	40 mmL (OR MRF'S Std)
M12	40 mmL (OR MRF'S Std)

ID. NO. : BN - 02

NO.	GENERAL REQUIREMENTS	
1	COMPLIANCE STANDARD	ASTM / ANSI / IEC / SNI
2	EQUIPMENT DESCRIPTION	BOLT & NUT (HEXAGONAL) FULL THREAD
3	MATERIAL	STAINLESS STEEL SS-304
4	FINISHED	NATURAL
5	SERVICE	ACCESSORIES MATERIAL FOR SUPPORT JUNCTION BOX, LOCAL CONTROL STATION & OTHERS

OUTLINE

DYNA BOLT

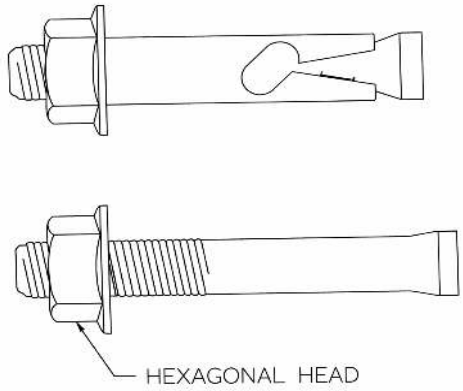

NOTE

1. AVAILABLE SIZES ARE:

Nom. Size	Length
M4	30 mmL (OR MRF'S Std)
M6	33 mmL (OR MRF'S Std)
M8	36 mmL (OR MRF'S Std)
M10	40 mmL (OR MRF'S Std)
M12	50 mmL (OR MRF'S Std)

ID. NO. : BN - 03

NO.	GENERAL REQUIREMENTS	
1	COMPLIANCE STANDARD	ASTM / ANSI / IEC / SNI
2	EQUIPMENT DESCRIPTION	DYNA BOLT
3	MATERIAL	BODY : STAINLESS STEEL, BOLT & NUT : STAINLESS STEEL SS-304
4	FINISHED	BODY : NATURAL, BOLT & NUT : NATURAL
5	SERVICE	ACCESSORIES MATERIAL FOR SUPPORT AT CONCRETE STRUCTURE

OUTLINE

HOLE-IN ANCHOR BOLT (TYPE - AY)

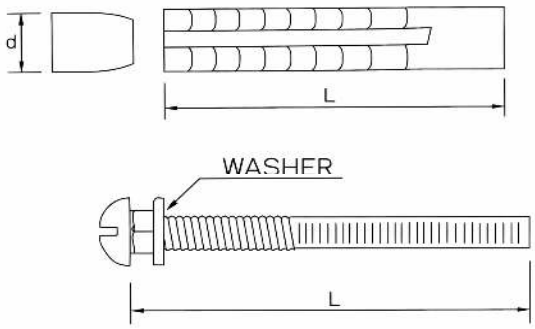

NOTE

1. AVAILABLE SIZES ARE:

NOMINAL SIZE	DIMENSION		
	D	L	I
M3	6.0	15.0	25
M4	7.0	17.5	25
M5	8.0	21.5	32

ID. NO. : BN - 04

NO.	GENERAL REQUIREMENTS	
1	COMPLIANCE STANDARD	ASTM / ANSI / IEC / SNI
2	EQUIPMENT DESCRIPTION	HOLE-IN ANCHOR BOLT (TYPE - AY)
3	MATERIAL	BODY/NUT : LEAD, BOLT & WASHER : STAINLESS STEEL SS-304
4	FINISHED	NATURAL
5	SERVICE	ACCESSORIES MATERIAL FOR SUPPORT STEEL PLATE AT CONCRETE STRUCTURE

OUTLINE

RACEWAY CHANNEL

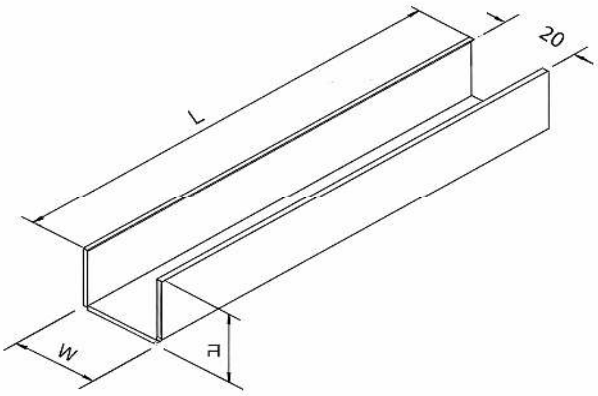

ID. NO. : RW - 01

NO.	GENERAL REQUIREMENTS	
1	COMPLIANCE STANDARD	ASTM / ANSI / IEC / SNI
2	EQUIPMENT DESCRIPTION	RACEWAY CHANNEL
3	MATERIAL	STEEL PLATE 2mm(t)
4	FINISHED	HOT DIP GALVANIZED
5	SIZE	30mm(H) x 40mm(W) x 3000(L)
6	SERVICE	SUPPORT FOR CABLE ROUTE

OUTLINE

COVER RACEWAY CHANNEL

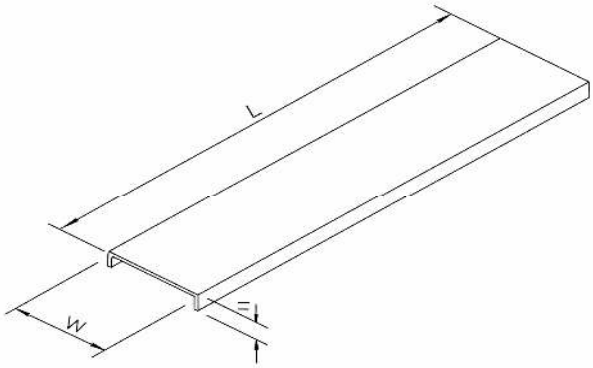

ID. NO. : RW - 02

NO.	GENERAL REQUIREMENTS	
1	COMPLIANCE STANDARD	ASTM / ANSI / IEC / SNI
2	EQUIPMENT DESCRIPTION	COVER RACEWAY CHANNEL
3	MATERIAL	STEEL PLATE 1.2mm(t)
4	FINISHED	HOT DIP GALVANIZED
5	SIZE	8mm(H) x 44mm(W) x 3000(L)
6	SERVICE	COVER FOR RACEWAY CHANNEL

OUTLINE

90° HORIZONTAL RACEWAY ELBOW COVER

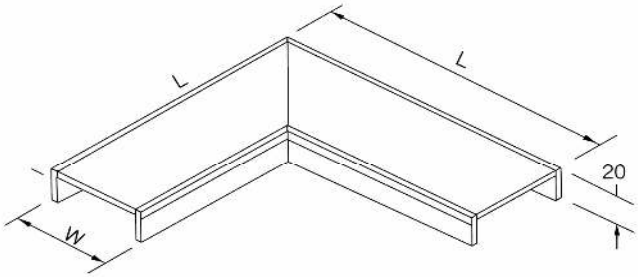

ID. NO. : RW - 03

NO.	GENERAL REQUIREMENTS	
1	COMPLIANCE STANDARD	ASTM / ANSI / IEC / SNI
2	EQUIPMENT DESCRIPTION	90° HORIZONTAL RACEWAY ELBOW COVER
3	MATERIAL	STEEL PLATE 1.2mm(t)
4	FINISHED	HOT DIP GALVANIZED
5	SIZE	8mm(H) x 88mm(W) x MFR'S Std(L)
6	SERVICE	COVER FOR 90° HORIZONTAL RACEWAY ELBOW COVER

OUTLINE

90° HORIZONTAL RACEWAY ELBOW

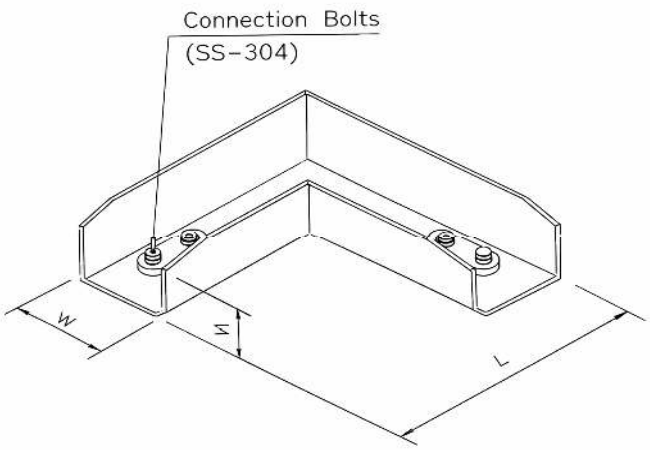

ID. NO. : RW - 04

NO.	GENERAL REQUIREMENTS	
1	COMPLIANCE STANDARD	ASTM / ANSI / IEC / SNI
2	EQUIPMENT DESCRIPTION	90° HORIZONTAL RACEWAY ELBOW
3	MATERIAL	STEEL PLATE 2mm(t)
4	FINISHED	HOT DIP GALVANIZED
5	SIZE	25mm(H) x 35.7mm(W) x 100mm(L)
6	SERVICE	SUPPORT FOR CABLE ROUTE

OUTLINE

HORIZONTAL RACEWAY TEE COVER

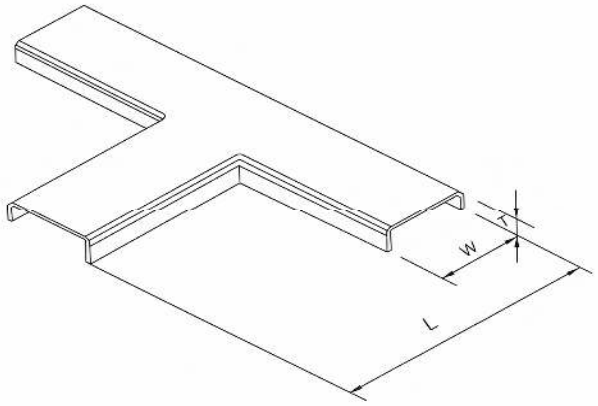

ID. NO. : RW - 05

NO.	GENERAL REQUIREMENTS	
1	COMPLIANCE STANDARD	ASTM / ANSI / IEC / SNI
2	EQUIPMENT DESCRIPTION	HORIZONTAL RACEWAY TEE COVER
3	MATERIAL	STEEL PLATE 1.2mm(t)
4	FINISHED	HOT DIP GALVANIZED
5	SIZE	8mm(H) x 43.3mm(W) x MFR'S Std(L)
6	SERVICE	COVER FOR HORIZONTAL RACEWAY TEE COVER

OUTLINE

HORIZONTAL RACEWAY TEE

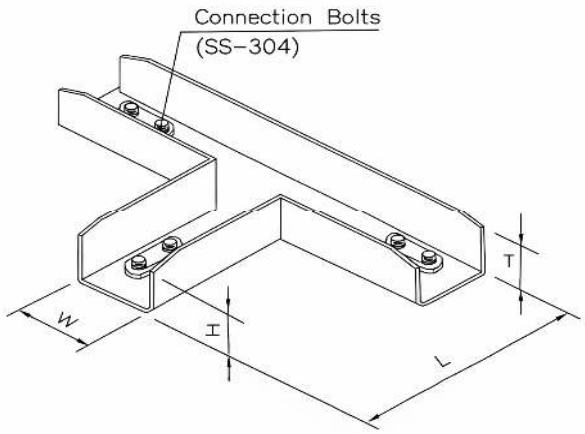

ID. NO. : RW - 06

NO.	GENERAL REQUIREMENTS	
1	COMPLIANCE STANDARD	ASTM / ANSI / IEC / SNI
2	EQUIPMENT DESCRIPTION	HORIZONTAL RACEWAY TEE
3	MATERIAL	STEEL PLATE 2mm(t)
4	FINISHED	HOT DIP GALVANIZED
5	SIZE	25mm(H) x 35.7mm(W) x 100mm(L)
6	SERVICE	SUPPORT FOR CABLE ROUTE

OUTLINE

HORIZONTAL RACEWAY CROSS COVER

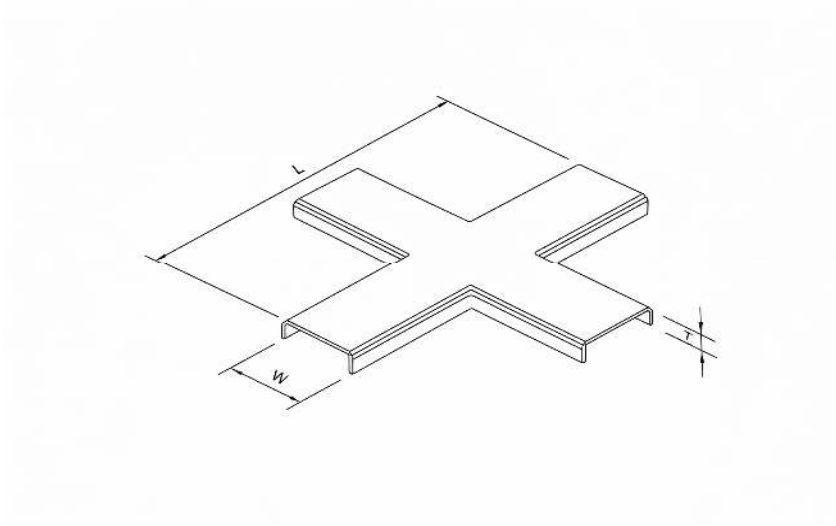

ID. NO. : RW - 07

NO.	GENERAL REQUIREMENTS	
1	COMPLIANCE STANDARD	ASTM / ANSI / IEC / SNI
2	EQUIPMENT DESCRIPTION	HORIZONTAL RACEWAY CROSS COVER
3	MATERIAL	STEEL PLATE 1.2mm(t)
4	FINISHED	HOT DIP GALVANIZED
5	SIZE	8mm(H) x 44mm(W) x MFR'S Std(L)
6	SERVICE	COVER FOR HORIZONTAL RACEWAY CROSS COVER

OUTLINE

HORIZONTAL RACEWAY CROSS

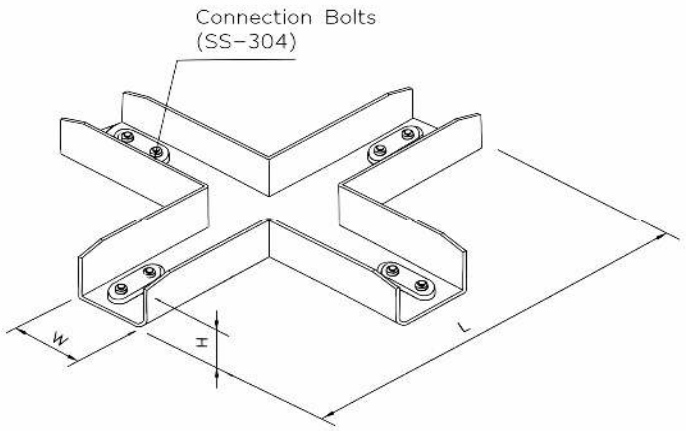

ID. NO. : RW - 08

NO.	GENERAL REQUIREMENTS	
1	COMPLIANCE STANDARD	ASTM / ANSI / IEC / SNI
2	EQUIPMENT DESCRIPTION	HORIZONTAL RACEWAY CROSS
3	MATERIAL	STEEL PLATE 2mm(t)
4	FINISHED	HOT DIP GALVANIZED
5	SIZE	25mm(H) x 35.7mm(W) x 140mm(L)
6	SERVICE	SUPPORT FOR CABLE ROUTE

OUTLINE

RACEWAY END CONNECTOR

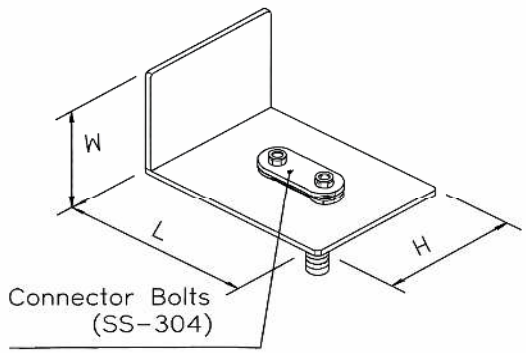

ID. NO. : RW - 09

NO.	GENERAL REQUIREMENTS	
1	COMPLIANCE STANDARD	ASTM / ANSI / IEC / SNI
2	EQUIPMENT DESCRIPTION	RACEWAY END CONNECTOR
3	MATERIAL	STEEL PLATE 1.2mm(t)
4	FINISHED	HOT DIP GALVANIZED
5	SIZE	28.4mm(H) x 35.7mm(W) x 50mm(L)
6	SERVICE	SUPPORT FOR RACEWAY CABLE

OUTLINE

RACEWAY HANGER

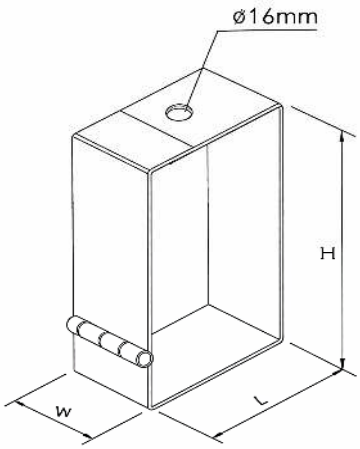

ID. NO. : RW - 10

NO.	GENERAL REQUIREMENTS	
1	COMPLIANCE STANDARD	ASTM / ANSI / IEC / SNI
2	EQUIPMENT DESCRIPTION	RACEWAY HANGER
3	MATERIAL	STEEL PLATE 2mm(t)
4	FINISHED	HOT DIP GALVANIZED
5	SIZE	30mm(H) x 45mm(W) x 80mm(L)
6	SERVICE	SUPPORT FOR RACEWAY CABLE

OUTLINE

RACEWAY BOX CONNECTOR

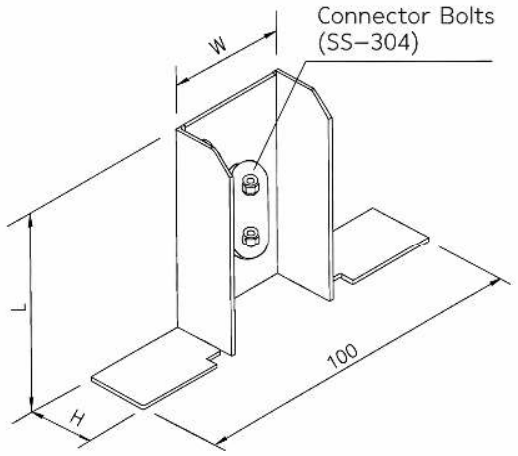

ID. NO. : RW - 11

NO.	GENERAL REQUIREMENTS	
1	COMPLIANCE STANDARD	ASTM / ANSI / IEC / SNI
2	EQUIPMENT DESCRIPTION	RACEWAY BOX CONNECTOR
3	MATERIAL	STEEL PLATE 2mm(t)
4	FINISHED	HOT DIP GALVANIZED
5	SIZE	25mm(H) x 35.7mm(W) x 100mm(L)
6	SERVICE	SUPPORT FOR RACEWAY CABLE

OUTLINE

RACEWAY COVER CLAMP

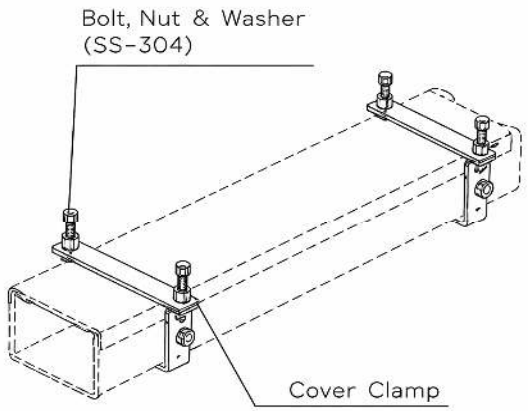

NOTE

1. DIMENSION MFR'S Std

1. C/W BOLT, NUT & WASHER (SS-304) = 2 SET

ID. NO. : RW - 12

NO.	GENERAL REQUIREMENTS	
1	COMPLIANCE STANDARD	ASTM / ANSI / IEC / SNI
2	EQUIPMENT DESCRIPTION	RACEWAY COVER CLAMP
3	MATERIAL	STEEL PLATE 1.2mm(t)
4	FINISHED	HOT DIP GALVANIZED
5	SERVICE	SUPPORT FOR RACEWAY CABLE

OUTLINE

RACEWAY JOINTER

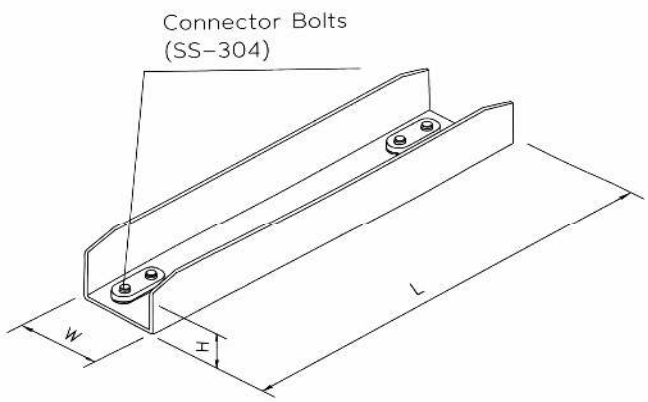

ID. NO. : RW - 13

NO.	GENERAL REQUIREMENTS	
1	COMPLIANCE STANDARD	ASTM / ANSI / IEC / SNI
2	EQUIPMENT DESCRIPTION	RACEWAY JOINTER
3	MATERIAL	STEEL PLATE 2mm(t)
4	FINISHED	HOT DIP GALVANIZED
5	SIZE	25mm(H) x 35.7mm(W) x 150mm(L)
6	SERVICE	SUPPORT FOR RACEWAY CABLE

OUTLINE

COUPLING NUT

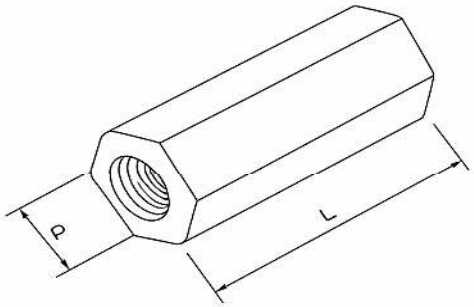

ID. NO. : SM - 01

NO.	GENERAL REQUIREMENTS	
1	COMPLIANCE STANDARD	ASTM / ANSI / IEC / SNI
2	EQUIPMENT DESCRIPTION	COUPLING NUT
3	MATERIAL	STAINLESS STEEL SS-304
4	FINISHED	NATURAL
5	SIZE	M12(d) x 40mm(L)
6	THICKNESS	VTA (VENDOR TO ADVISE)
7	SERVICE	ACCESSORIES MATERIAL

OUTLINE

HANGER ROD

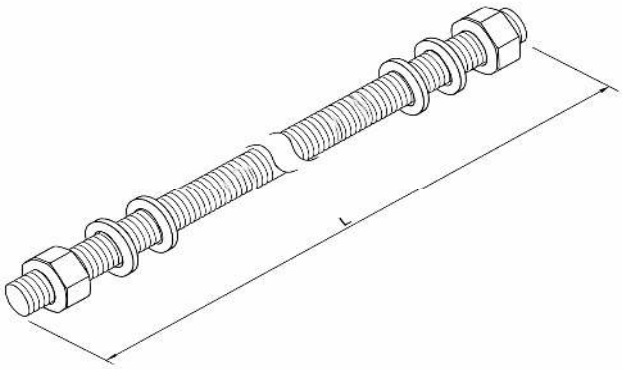

NOTE

1. FULL THREADS
2. C/W NUT, FLAT WASHER AND SPRING WASHER = 4 SET

ID. NO. : SM - 02

NO.	GENERAL REQUIREMENTS	
1	COMPLIANCE STANDARD	ASTM / ANSI / IEC / SNI
2	EQUIPMENT DESCRIPTION	HANGER ROD
3	MATERIAL	STAINLESS STEEL SS-304
4	FINISHED	NATURAL
5	SIZE	M12, 4000mm(L)
6	SERVICE	SUPPORT FOR CABLE LADDER, CABLE TRAY & PENDANT LIGHTING, INDOOR AREA

OUTLINE

STEEL ANGLE

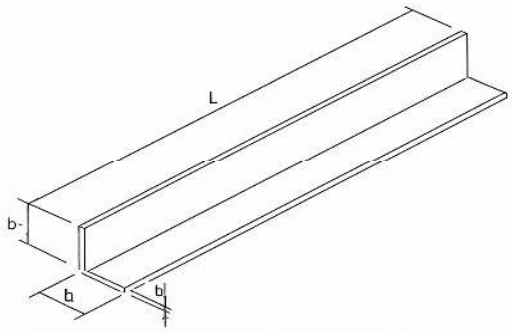

NOTE

1. AVAILABLE SIZES ARE:

(a)	(b)	(c)	(L)
50mm	50mm	5mm	6000mm
50mm	50mm	6mm	6000mm
75mm	75mm	6mm	6000mm

ID. NO. : SM - 03

NO.	GENERAL REQUIREMENTS	
1	COMPLIANCE STANDARD	ASTM / ANSI / IEC / SNI
2	EQUIPMENT DESCRIPTION	STEEL ANGLE
3	MATERIAL	STEEL
4	FINISHED	HOT DIP GALVANIZED
5	SERVICE	SUPPORT FOR ELECTRICAL EQUIPMENT

OUTLINE

STEEL CHANNEL

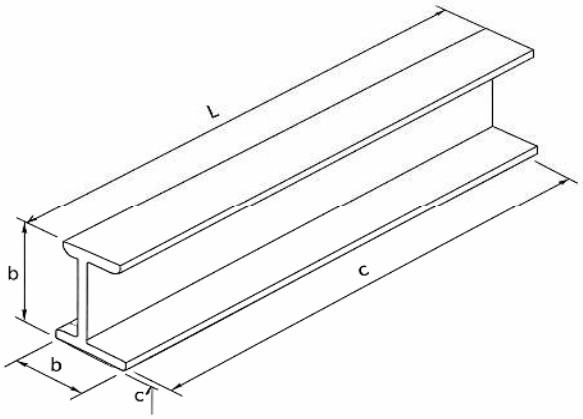

ID. NO. : SM - 04

NO.	GENERAL REQUIREMENTS	
1	COMPLIANCE STANDARD	ASTM / ANSI / IEC / SNI
2	EQUIPMENT DESCRIPTION	STEEL CHANNEL
3	MATERIAL	STEEL
4	FINISHED	HOT DIP GALVANIZED
5	SIZE	100mm(a) x 50mm(b) x 6mm(c) x 6000mm(L)
6	SERVICE	SUPPORT FOR ELECTRICAL EQUIPMENT

OUTLINE

STEEL PLATE

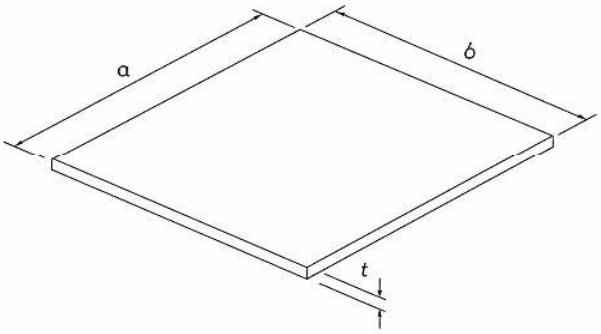

NOTE

1. AVAILABLE SIZES ARE:

TYPE	(a)	(b)	(c)
TYPE-A	100mm	180mm	6mm
TYPE-B	100mm	100mm	6mm
TYPE-C	120mm	120mm	6mm
TYPE-D	150mm	150mm	6mm
TYPE-E	250mm	250mm	6mm

ID. NO. : SM - 05

NO.	GENERAL REQUIREMENTS	
1	COMPLIANCE STANDARD	ASTM / ANSI / IEC / SNI
2	EQUIPMENT DESCRIPTION	STEEL PLATE
3	MATERIAL	STAINLESS STEEL SS-304
4	FINISHED	HOT DIP GALVANIZED
5	SERVICE	SUPPORT FOR ELECTRICAL EQUIPMENT

OUTLINE

STEEL WIRE ROPE

ID. NO. : SM - 06

NO.	GENERAL REQUIREMENTS	
1	COMPLIANCE STANDARD	ASTM / ANSI / IEC / SNI
2	EQUIPMENT DESCRIPTION	STEEL WIRE ROPE
3	MATERIAL	STEEL
4	FINISHED	ELECTRO GALVANIZED
5	SIZE	Dia : 2mm
6	SERVICE	SUPPORT FOR ELECTRICAL EQUIPMENT

OUTLINE

UNISTRUT CHANNEL

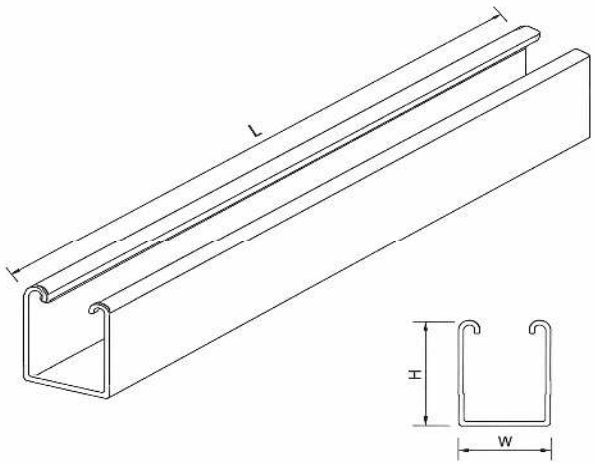

NOTE

1. AVAILABLE SIZES ARE:

H(mm)	W(mm)	L(mm)
22	41	3000
41	41	3000

ID. NO. : SM - 07

NO.	GENERAL REQUIREMENTS	
1	COMPLIANCE STANDARD	ASTM / ANSI / IEC / SNI
2	EQUIPMENT DESCRIPTION	UNISTRUT CHANNEL
3	MATERIAL	STEEL 2.6mm(t)
4	FINISHED	HOT DIP GALVANIZED
5	SIZE	Dia : 2mm
6	SERVICE	SUPPORT FOR CONDUIT

OUTLINE

UNISTRUT CLAMP

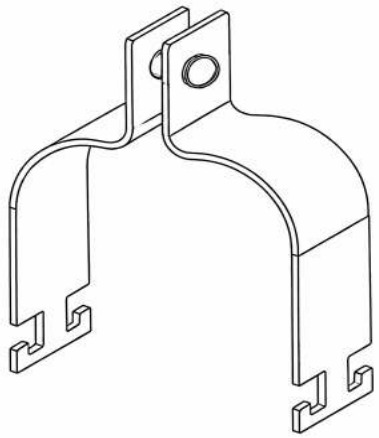

ID. NO. : SM - 08

NO.	GENERAL REQUIREMENTS	
1	COMPLIANCE STANDARD	ASTM / ANSI / IEC / SNI
2	EQUIPMENT DESCRIPTION	UNISTRUT CLAMP
3	MATERIAL	STEEL
4	FINISHED	HOT DIP GALVANIZED
5	SIZE	¾", 1", 1¼", 1½", 2", 2½", 3", 3½", 4"
6	THICKNESS	VTA (VENDOR O ADVISE)
7	SERVICE	SUPPORT FOR CABLE ROUTE

OUTLINE

MULTI CABLE TRANSIT

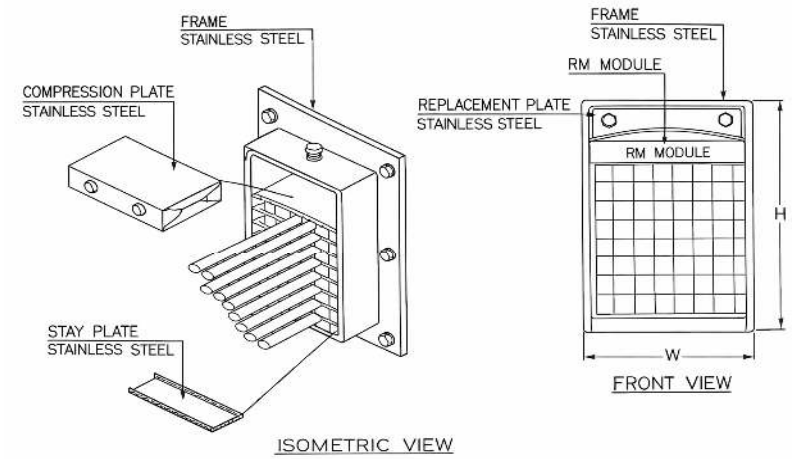

NOTE

1. TYPE SF FRAME
2. C/W ACCESSORIES : STAY PLATE, COMPRESSION PLATE, END PACKING, REPLACEMENT COMPRESSION BOLT STAINLESS, REPLACEMENT PLUG STAINLESS STEEL, AND TALLOW LUBRICANT TUBE FILLER
3. AVAILABLE SIZES ARE:

DIMENSION	
W	H
60mm	120mm
120mm	120mm
180mm	120mm

ID. NO. : MCT - 01

NO.	GENERAL REQUIREMENTS	
1	COMPLIANCE STANDARD	ASTM / ANSI / IEC / SNI
2	EQUIPMENT DESCRIPTION	MULTI CABLE TRANSIT
3	MATERIAL	STAINLESS STEEL SS-304
4	FINISHED	NATURAL
5	SERVICE	SUPPORT FOR CABLE WAY

1. MATERIAL NAME : GROUNDING ELECTRODE

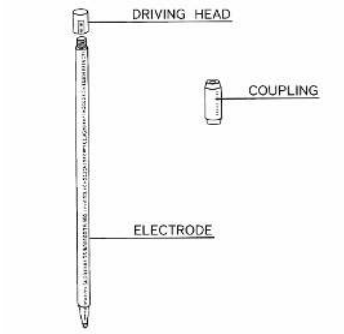

ID. CODE : GL - 01

2. DESCRIPTION :

NO.	ITEM	DESCRIPTION
1	COMPLIANCE STANDARD	ASTM / ANSI / IEC / SNI
2	MATERIAL	SOLID COPPER
3	FINISHED	NATURAL
4	TYPE	DRIVEN TYPE
5	DIMENSION	¾" Dia. X 3000mmL
6	SERVICE	GROUNDING ROD, DRIVING STUD, COUPLING ROD, OUTDOOR AREA

1. MATERIAL NAME : GROUNDING INSPECTION PIT C/W COVER

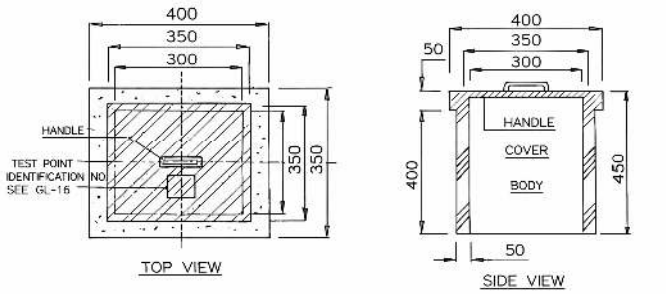

ID. CODE : GL - 02

2. DESCRIPTION :

NO.	ITEM	DESCRIPTION
1	COMPLIANCE STANDARD	ASTM / ANSI / IEC / SNI
2	MATERIAL	PRECAST CONCRETE
3	FINISHED	NATURAL
4	TYPE	SQUARE
5	DIMENSION	400mm x 40mm x 450mmL
6	SERVICE	MAN HOLE CONTROL GROUNDING ROOD, OUTDOOR AREA

1. MATERIAL NAME : GROUNDING WIRE CONNECTOR ("C" SLEEVE COMPRESSION/CRIMP TYPE)

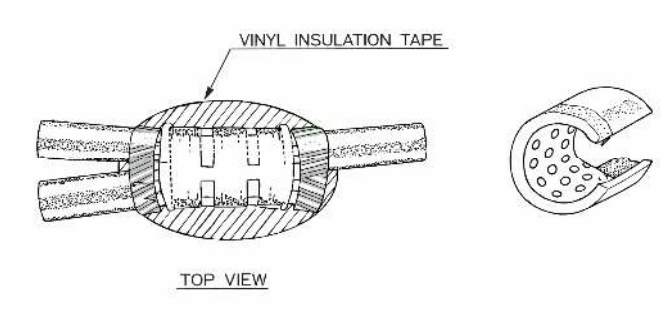

ID. CODE : GL - 03

2. DESCRIPTION :

NO.	ITEM	DESCRIPTION		
1	COMPLIANCE STANDARD	ASTM / ANSI / IEC / SNI		
2	MATERIAL	COPPER		
3	FINISHED	NATURAL		
4	TYPE	COMPRESSION TYPW (FOR COPPER CONDUCTOR) "C"		
5	DIMENSION	70mm² + 70mm²	70mm² + 50mm²	70mm² + 35mm²
6	SERVICE	CLAMP FOR GROUNDING CABLE TO MAIN GROUNDING CABLE, ABOVEGROUND		

1. MATERIAL NAME : GROUNDING ELECTRODE AND WIRE CLAMP

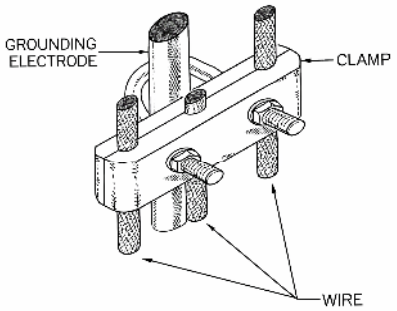

ID. CODE : GL - 04

2. DESCRIPTION :

NO.	ITEM	DESCRIPTION
1	COMPLIANCE STANDARD	ASTM / ANSI / IEC / SNI
2	MATERIAL	SOLID COPPER
3	FINISHED	NATURAL
4	TYPE	FOR COPPER CONDUCTOR
5	SIZE	70mm²
6	REMARKS	FOR ¾" Dia GROUNDING ELECTRODE ROD, C/W U-BOLT, NUT, SPRING & FLAT WASHERS
7	SERVICE	CLAMP FOR GROUNDING ROD

1. MATERIAL NAME : MOLD HORIZONTAL CROSS (EXOTHERMIC WELDING)

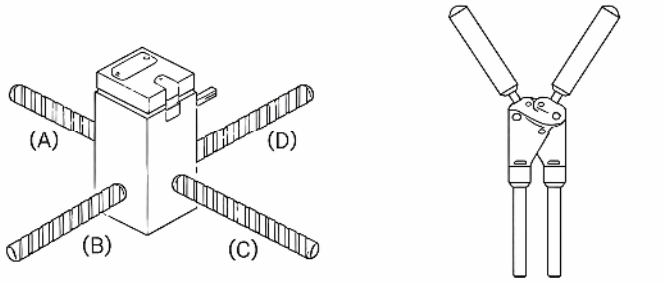

ID. CODE : GL - 05

2. DESCRIPTION :

NO.	ITEM	DESCRIPTION			
1	COMPLIANCE STANDARD	ASTM / ANSI / IEC / SNI			
2	MATERIAL	GRAPHITE			
3	SIZE	95mm² (A)	95mm² (B)	95mm² (C)	95mm² (D)
4	REMARKS	- HORIZONTAL CABLE TAP TO HORIZONTAL CABLRE RUN - C/W. HANDLE CLAMPS, FLINT IGNITOR, CABLE CLEANING BRUSH, SLAG REMOVAL SPADE, MOLD CLEANING BRUSH, CABLE CLAMP, TORCH HEAD			
5	SERVICE	CLAMP FOR GROUNDING CABLE TO MAIN GROUNDING CABLE, UNDERGROUND			

1. MATERIAL NAME : MOLD HORIZONTAL TEE (EXOTHERMIC WELDING)

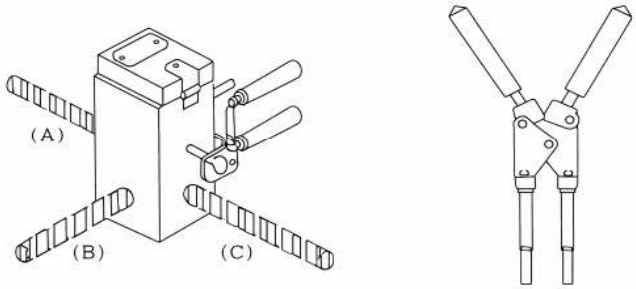

ID. CODE : GL - 06

2. DESCRIPTION :

NO.	ITEM	DESCRIPTION		
1	COMPLIANCE STANDARD	ASTM / ANSI / IEC / SNI		
2	MATERIAL	GRAPHITE		
3	SIZE	95mm² (A)	95mm² (B)	95mm² (C)
4	REMARKS	- HORIZONTAL CABLE TAP TO HORIZONTAL CABLRE RUN - C/W. HANDLE CLAMPS, FLINT IGNITOR, CABLE CLEANING BRUSH, SLAG REMOVAL SPADE, MOLD CLEANING BRUSH, CABLE CLAMP, TORCH HEAD		
5	SERVICE	CLAMP FOR GROUNDING CABLE TO MAIN GROUNDING CABLE, UNDERGROUND		

1. MATERIAL NAME : GROUNDING LUG

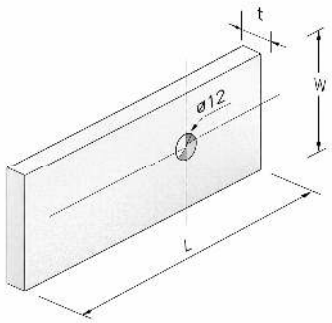

ID. CODE : GL - 07

2. DESCRIPTION :

NO.	ITEM	DESCRIPTION
1	COMPLIANCE STANDARD	ASTM / ANSI / IEC / SNI
2	MATERIAL	STEEL
3	FINISHED	HOT DIP GALVANIZED
4	SIZE	100mm (L) X 50mm (W) X 12mm (t)
5	SERVICE	GROUNDING CONNECTION FOR EQUIPMENT

1. MATERIAL NAME : GROUNDING BAR

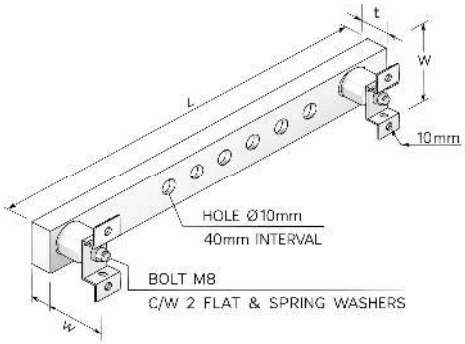

ID. CODE : GL - 08

2. DESCRIPTION :

NO.	ITEM	DESCRIPTION
1	COMPLIANCE STANDARD	ASTM / ANSI / IEC / SNI
2	MATERIAL	COPPER BAR
3	FINISHED	TIN PLATED
4	SIZE	400mm (L) X 50mm (W) X 5mm (t)
5	SERVICE	BAR GROUNDING CONNECTION FOR MANY EQUIPMENT

1. MATERIAL NAME : AIR TERMINAL

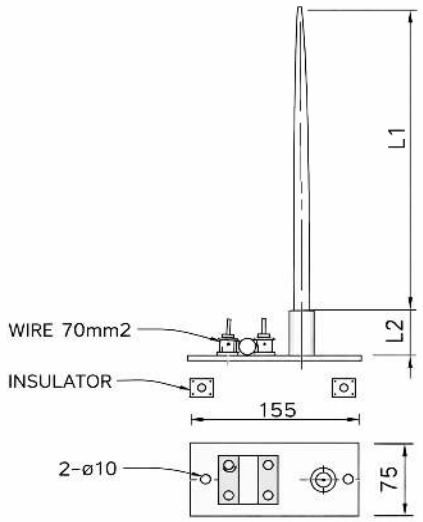

ID. CODE : GL - 11

2. DESCRIPTION :

NO.	ITEM	DESCRIPTION		
1	COMPLIANCE STANDARD	ASTM / ANSI / IEC / SNI		
2	MATERIAL	COPPER		
3	FINISHED	NATURAL		
4	DIMENSION	L1 (mm) : Min. 600mm, L2 (mm) : 50 mm		
5	SIZE	16 mm Ø	19 mm Ø	
6	REMARKS	- C/W BOLT, NUT & WASHER FOR CLAMPED CONNECTION (S/S) - C/W INSULATOR BOLT, NUT & WASHER FOR MOUNTING BASED (S/S)		
7	SERVICE	TERMINAL HEAD MOUNTED IN A LIGHTNING ROD INSTALLATION		

1. MATERIAL NAME : TESTING JOINT BOX

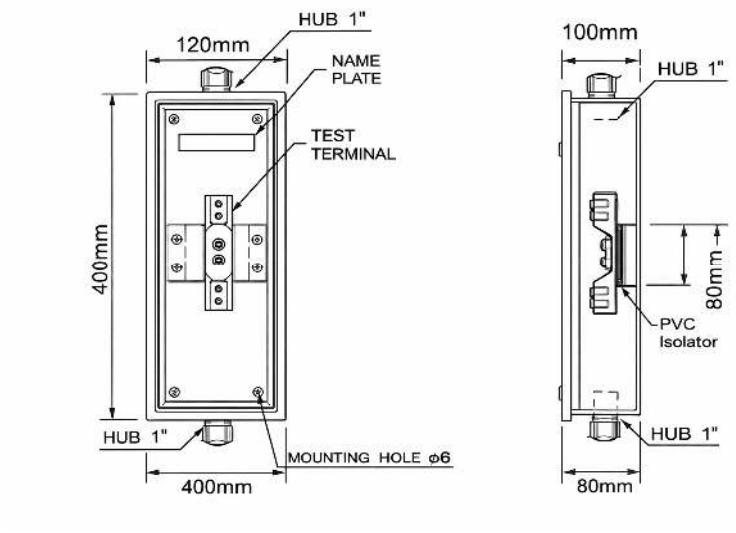

ID. CODE : GL - 12

2. DESCRIPTION :

NO.	ITEM	DESCRIPTION
1	COMPLIANCE STANDARD	ASTM / ANSI / IEC / SNI
2	MATERIAL TERMINAL	COPPER
3	MATERIAL BOX	POLYESTER CARBONATE (UV PROOF)
4	REMARKS	- TEST TERMINAL 70mm² (COPPER) - BOLT, NUT & WASHERS (STAINLESS STEEL) - ACRYLIC NAME PLATE WITH BLACK ALPHABET - C/W MOUNTING BOLT, NUT, SPRING & FLAT, WASHERS M6X25mmL STAINLESS STEEL 4 SETS
5	SERVICE	TESTING JOIN BOX FOR LIGHTNING PROTECTION ON BUILDING

1. MATERIAL NAME : EXOTHERMIC WELDING POWDER

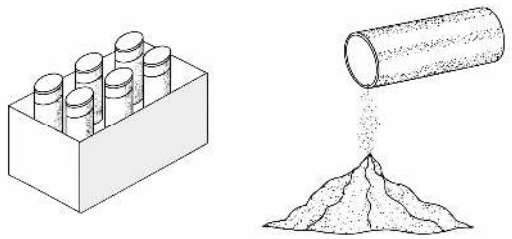

ID. CODE : GL - 13

2. DESCRIPTION :

NO.	ITEM	DESCRIPTION
1	COMPLIANCE STANDARD	ASTM / ANSI / IEC / SNI
2	MATERIAL	MIXTURE OF COPPER OXIDE AND ALUMINUM
3	ACCESSORIES	C/W STARTING POWDER, METAL DISK
4	QUANTITY	1 PACK = 10 TUBES
5	SERVICE	EXOTHERMIC WELDING GROUNDING

1. MATERIAL NAME : CONDUCTOR CLAMP

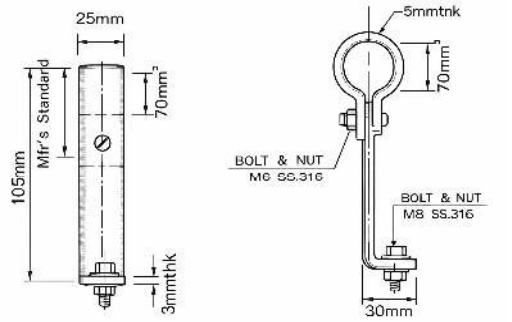

ID. CODE : GL - 14

2. DESCRIPTION :

NO.	GENERAL REQUIREMENTS	
1	COMPLIANCE STANDARD	ASTM / ANSI / IEC / SNI
2	MATERIAL CLAMP	COPPER
3	MATERIAL BOLT & NUT	STAINLESS STEEL
4	FINISHED	NATURAL
5	REMARK	FOR CABLE BC 70mm²
6	SERVICE	SUPPORT CLAMP FOR GROUNDING CABLE

1. MATERIAL NAME : T-JOINT TERMINAL

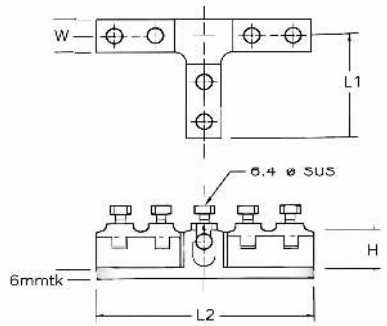

ID. CODE : GL - 15

2. DESCRIPTION :

NO.	GENERAL REQUIREMENTS	
1	COMPLIANCE STANDARD	ASTM / ANSI / IEC / SNI
2	MATERIAL	COPPER
3	FINISHED	NATURAL
4	SIZE	MANUFACTURE STANDARD
5	REMARK	CONDUCTOR SIZE 70mm² C/W RUBBER SEAL
6	SERVICE	AS A MEDIA CONNECTING THE CABLE

1. MATERIAL NAME : TEST POINT GROUNDING MARKER

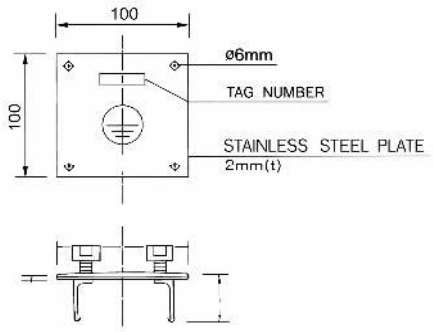

ID. CODE : GL - 16

2. DESCRIPTION :

NO.	GENERAL REQUIREMENTS	
1	COMPLIANCE STANDARD	ASTM / ANSI / IEC / SNI
2	MATERIAL	STAINLESS STEEL
3	FINISHED	NATURAL
4	REMARKS	-THICKNESS OF SUS PLATE = 2mm - LETTERING SHALL BE ENGRAVED ON THE S/S PLATED (RED COLOR)
5	SERVICE	MARKER/COVER FOR GROUNDING TEST BOX

1. MATERIAL NAME : LIGHTNING POLE

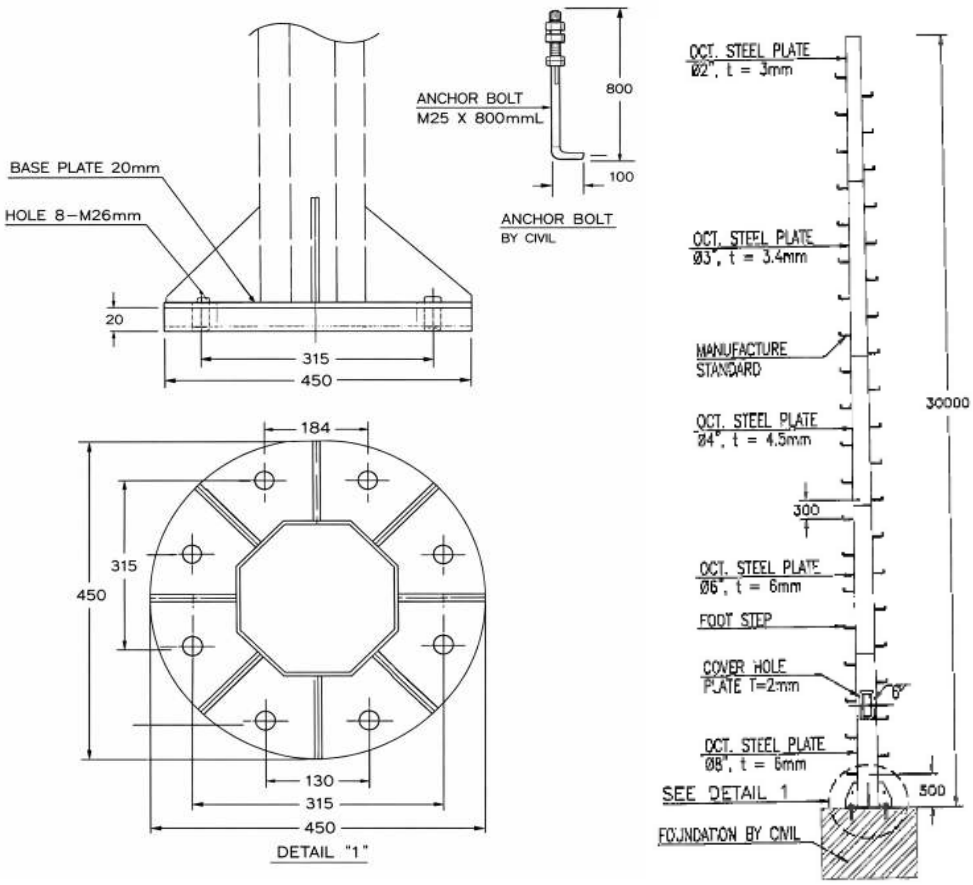

ID. CODE : GL - 17

2. DESCRIPTION :

NO.	ITEM	DESCRIPTION
1	COMPLIANCE STANDARD	ASTM / ANSI / IEC / SNI
2	MATERIAL	OCTAGONAL STEEL PLATE (CS A36) C/W MILL CERTIFICATE
3	FINISHED	HOT DIP GALVANIZED
4	SIZE	HEIGHT 30.000mm
5	REMARK	-ANCHOR BOLT M25 X 800, MATERIAL A307 (C/W STRENGTH AND TENSION TEST CERTIFICATE BY MANUFACTURING) -FIXING BRACKET SUPPORT PER 1 METER -STRUCTURAL ANALYSIS STRENGTH FOR POLE SHALL USE SOFTWARE "STAD PRO ANALYSIS"
6	SERVICE	POLE FOR LIGHTNING PROTECTION